# NETTE

PTL1426-PBR

TROY LIGHTING

Celebrating the beauty of imperfection, the sculptural Nette lamp features an asymmetrical body and tapered shade in all-over natural woven Abaca. The shapely silhouette gives Nette a rustic presence, while the Patina Brass finish adds to the warm aura surrounding the piece. Place Nette on a console, desk, or end table for an instant dose of artistry. Part of our Loft and Thought collection.

*Due to the one-of-a-kind nature of the medium, exact colors and patterns may vary slightly from the image shown.

## FINISHES

PATINA BRASS

## DIMENSIONS / SPECS

Height: 25.5"
Width/Diameter: 21"
Canopy/Backplate: 5.25"
Product Weight: 9.9lb
Canopy/Backplate Shape: Round
Sloped Ceiling Compatible: No
Living Finish: No
Uplight Only: No

Shade 1: Abaca
Shade 1 Finish: Natural
Shade 1 Top Width: 13"
Shade 1 Bottom L/W: 0" / 21"
Shade 1 Height: 11.5"

## ELECTRICAL

Bulb 1
Bulb Included: No
Socket: E26 Medium Base
Bulb Type: A19
Max Wattage: 15
Bulb Quantity: 1
Cord Type: SPT-2 BLACK FABRIC
Switch Type: ON/OFF SWITCH ON SOCKET
Gem Box Required (2"x3"): No
Dark Sky: No
Convertible: No

Voltage: 120

## SHIPPING

Carton 1: 27" x 26" x 26"
Carton 1 Weight: 24lb
Shipping Method: Ground
Country of Origin: PH



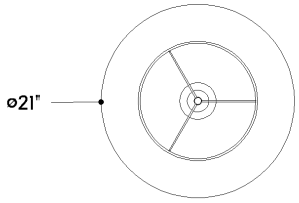


TOP

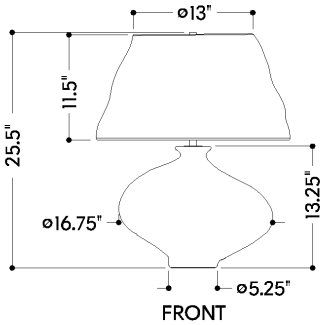


FRONT

HUDSON VALLEY
LIGHTING GROUP