BOHEN

P2225-FRN/PBR

TROY LIGHTING

A modern reimagining of early American gas lanterns, Bohen features a sleek profile defined by clean lines and heritage details. Finished in Forged Iron with Patina Brass hardware, it has a rustic, yet refined presence that is particularly suited to traditional homes. Available in three sizes with a post, Bohen illuminates large entrances, front doors, and driveways with its timeless design.

FINISHES

FRENCH IRON w/ PATINA BRASS
Coastal Suitable Finish (EPM): No

DIMENSIONS / SPECS

Height: 25"
Width/Diameter: 9.5"
Length: 9.5"
Canopy/Backplate: 3.25"
Product Weight: 9.26lb
Canopy/Backplate Shape: Round
Sloped Ceiling Compatible: No
Living Finish: No
Uplight Only: No

Shade 1: Glass
Shade 1 Finish: Clear
Shade 1 Top Width: 7.5"
Shade 1 Height: 17.25"

ELECTRICAL

Bulb 1
Bulb Included: No
Socket: E12 Candelabra Base
Bulb Type: B11
Max Wattage: 8
Bulb Quantity: 2
Gem Box Required (2"x3"): No
Dark Sky: No
Convertible: No

Voltage: 120

SHIPPING

Carton 1: 28" x 13" x 13"
Carton 1 Weight: 14lb
Shipping Method: Ground
Country of Origin: VN



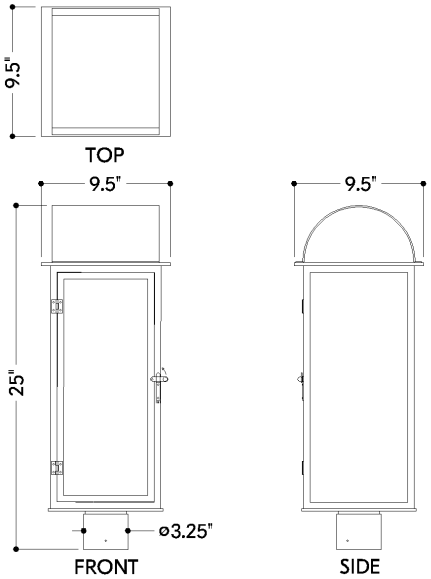

HUDSON VALLEY
LIGHTING GROUP