METAL NO. 2

MDS953-PN

HUDSON VALLEY LIGHTING

Exposed hardware adds a touch of industrial chic to a timeless cone shade silhouette. Go for a crisp monochromatic look with the allover Polished Nickel or Aged Brass finish or pair the Aged Brass hardware with a Distressed Bronze shade. The portable sconce features an adjustable arm and braided cord. Part of our Mark D. Sikes collection.

FINISHES

POLISHED NICKEL



DIMENSIONS / SPECS

Height: 22.5"
Width/Diameter: 9.5"
Product Weight: 6.6lb
Extension: 30"
Top to Center: 9.75"
Canopy/Backplate Shape: Rectangle
Sloped Ceiling Compatible: No
Living Finish: No
Uplight Only: No

Shade 1: Steel
Shade 1 Finish: Polished Nickel
Shade 1 Bottom L/W: 0" / 9.5"
Shade 1 Height: 4.375"

ELECTRICAL

Bulb 1
Bulb Included: No
Socket: E26 Medium Base
Max Wattage: 60
Bulb Quantity: 1
Switch Type: 12' Twist Wire Cord
Gem Box Required (2"x3"): No
Dark Sky: No
Convertible: No

Voltage: 120 VAC

SHIPPING

Carton 1: 23" x 20" x 13"
Carton 1 Weight: 10lb
Shipping Method: Ground
Country of Origin: CN

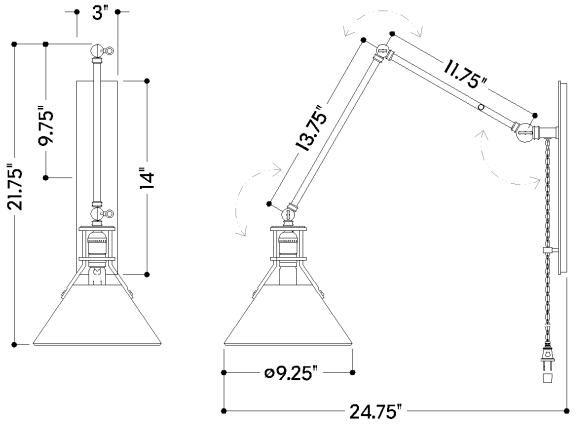

FRONT SIDE