PAINTED NO. 2

MDS351-AGB/LFG

HUDSON VALLEY LIGHTING

Painted No.2 has an effortless look, the result of careful consideration. A relaxed form with timeless style, two beautiful finish options make it feel fresh.

FINISHES

AGED BRASS

DIMENSIONS / SPECS

Height: 9.25"
Width/Diameter: 9.5"
Minimum Height: 12.25"
Maximum Height: 66.25"
Canopy/Backplate: 5"
Product Weight: 4lb
Canopy/Backplate Shape: Round
Sloped Ceiling Compatible: No
Living Finish: No
Uplight Only: No

Shade 1: Steel

ELECTRICAL

Bulb 1
Bulb Included: No
Socket: E26 Medium Base
Bulb Type: T10-5.5
Max Wattage: 60
Bulb Quantity: 1
Gem Box Required (2"x3"): No
Dark Sky: No
Convertible: No

Voltage: 120 VAC

SHIPPING

Carton 1: 13" x 13" x 13"
Carton 1 Weight: 5lb
Shipping Method: Ground
Country of Origin: VN



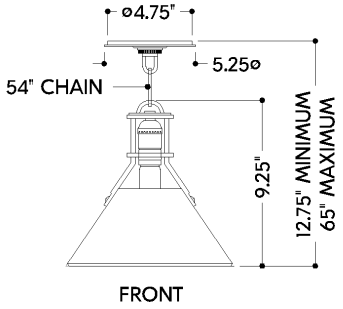

FRONT

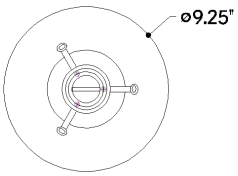

BOTTOM