ALBION

MDS2201-AGB/OW

HUDSON VALLEY LIGHTING

FINISHES

AGED BRASS w/ OFF-WHITE (MDS)

DIMENSIONS / SPECS

Height: 66"
Width/Diameter: 66"
Length: 66"
Minimum Height: 66"
Maximum Height: 66"
Hanging Type: 108" Premium Composite Cord
Product Weight: 66lb
Extension: 66"
Top to Center: 66"
Sloped Ceiling Compatible: No
Living Finish: Yes
Uplight Only: Yes
Min Extension: 66"
Max Extension: 66"

ELECTRICAL

Bulb 1
Bulb Included: No
Max Wattage:
Bulb Quantity:
Wire Length: 500mm
Cord Type: ! New Cord Type
Dimmer Type: Incandescent
Switch Type: ON/OFF STOMP SWITCH
Gem Box Required (2"x3"): Yes
Dark Sky: Yes
Convertible: No
CRI: 66
Color Temp.: 66k
Lumens: 66
Title 24: Yes
Field Serviceable: No

Gem Box: Required

Battery
Battery Powered: Yes
Battery Included: Yes
Battery Life: ! New Battery Life !

SHIPPING

Carton 1: 18" x 18" x 12"
Carton 1 Weight: 6lb
Shipping Method: Ground
Country of Origin: VN



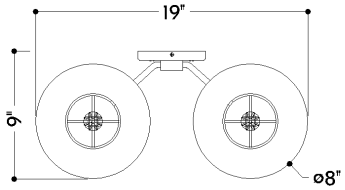

TOP

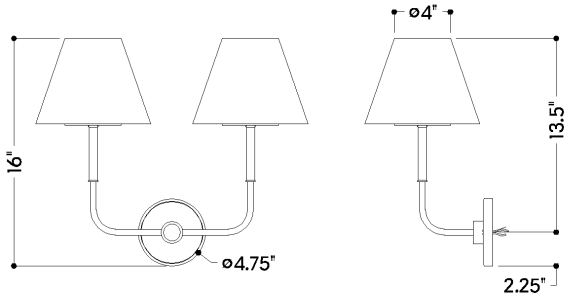

FRONT SIDE