CENTELLA

HL967201-AGB/WP

mitzi

Centella is all about contrasts. While embodying minimalist design principles, this highly tactile table lamp juxtaposes elements of hard and soft, presence and absence. Materiality is key, with a natural hand-woven jute shade fanning out over a smooth cement base. Featuring a concave indentation at the center of the base, Centella's distinctive profile is a study in dimensionality. Part of our Dabito x Mitzi Tastemakers collection.

*Due to the one-of-a-kind nature of the medium, exact colors and patterns may vary slightly from the image shown.

FINISHES

AGED BRASS w/ WHITE PLASTER



DIMENSIONS / SPECS

Height: 24.25"
Width/Diameter: 18"
Canopy/Backplate: 6"
Product Weight: 7.7lb
Canopy/Backplate Shape: Round
Sloped Ceiling Compatible: No
Living Finish: No
Uplight Only: Yes
Insert Included: Cover + Down Insert

Shade 1: Natural Woven
Shade 1 Finish: Light Jute String
Shade 1 Top Width: 4"
Shade 1 Bottom L/W: 0" / 18"
Shade 1 Height: 8.75"

ELECTRICAL

Bulb 1
Bulb Included: No
Socket: E26 Medium Base
Bulb Type: A19
Max Wattage: 15
Bulb Quantity: 1
Cord Type: SPT-2 BLACK FABRIC
Switch Type: ON/OFF SWITCH ON CORD
Gem Box Required (2"x3"): No
Dark Sky: No
Convertible: No

Voltage: 120

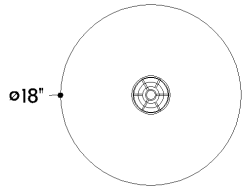

TOP

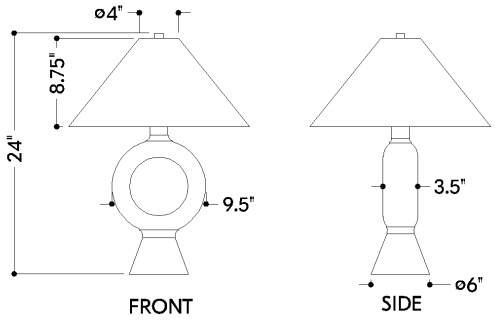

FRONT SIDE

SHIPPING

Carton 1: 26" x 20" x 20"
Carton 1 Weight: 14lb
Shipping Method: Ground
Country of Origin: VN

HUDSON VALLEY
LIGHTING GROUP