BATYA

HL890201-AGB/CBB

mitzi

Marrying minimalist design principles and a sense of playfulness, Batya focuses on color blocking to strike a pleasing balance. A companion to Corinne, this lamp features soft Bordeaux and soft blush hues that add a dose of subtle color. Batya is also available as a flush mount in two sizes with a cool Slate Blue shade. Part of our Zoe Feldman collection.

FINISHES

AGED BRASS w/ CERAMIC BORDEAUX BLUSH



DIMENSIONS / SPECS

Height: 24"
Width/Diameter: 16.5"
Canopy/Backplate: 4.5"
Product Weight: 6.82lb
Canopy/Backplate Shape: Round
Sloped Ceiling Compatible: No
Living Finish: No
Uplight Only: No

Shade 1: Linen
Shade 1 Finish: White
Shade 1 Top Width: 14.25"
Shade 1 Bottom L/W: 0" / 16.5"
Shade 1 Height: 10"

ELECTRICAL

Bulb 1
Bulb Included: No
Socket: E26 Medium Base
Bulb Type: A19
Max Wattage: 15
Bulb Quantity: 1
Switch Type: On/Off
Gem Box Required (2"x3"): No
Dark Sky: No
Convertible: No

Voltage: 120

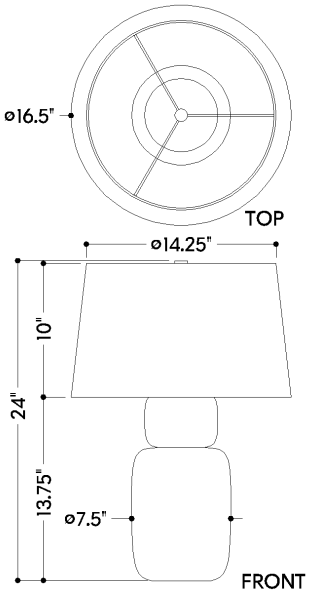

SHIPPING

Carton 1: 23" x 20" x 20"
Carton 1 Weight: 13lb
Shipping Method: Ground
Country of Origin: VN