PERILLA

H968101-OB

mitzi

Playing with shapes, texture, and light, Perilla creates modern geometries from a surprising mixture of materials. The elongated frame supports stacked forms that culminate in a textural wicker rattan shade. Decorative sphere details add an artisanal touch to the design. Perilla is available as a pendant, table lamp, or wall sconce in two finishes, Aged Brass and Old Bronze. Part of our Dabito x Mitzi Tastemakers collection.

*Due to the one-of-a-kind nature of the medium, exact colors and patterns may vary slightly from the image shown.

FINISHES

OLD BRONZE



DIMENSIONS / SPECS

Height: 21.25"
Width/Diameter: 9.5"
Canopy/Backplate: 4.75"
Product Weight: 3.3lb
Extension: 9.75"
Top to Center: 8.25"
Canopy/Backplate Shape: Round
Sloped Ceiling Compatible: No
Living Finish: No
Uplight Only: Yes

Shade 1: Natural Woven
Shade 1 Finish: Vintage Natural Wicker
Shade 1 Top Width: 2.75"
Shade 1 Bottom L/W: 0" / 9.5"
Shade 1 Height: 5"

ELECTRICAL

Bulb 1
Bulb Included: No
Socket: E12 Candelabra Base
Bulb Type: B11
Max Wattage: 8
Bulb Quantity: 1
Cord Type: B & W TEFLON W/ GROUND WIRE
Gem Box Required (2"x3"): No
Dark Sky: No
Convertible: No

Voltage: 120
Gem Box: Not Required

SHIPPING

Carton 1: 20" x 16" x 7"
Carton 1 Weight: 7lb
Shipping Method: Ground
Country of Origin: VN

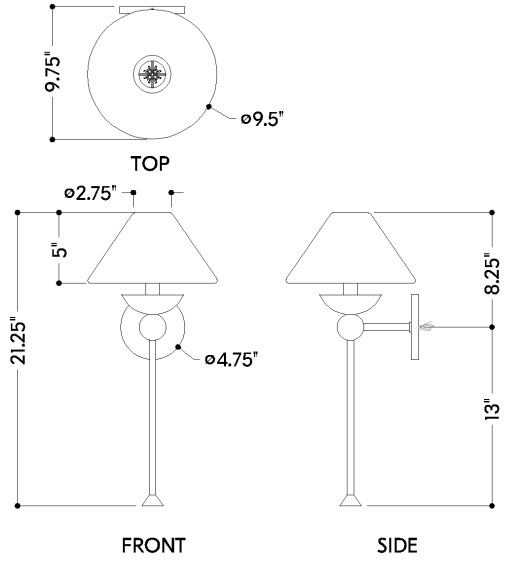

HUDSON VALLEY
LIGHTING GROUP