ROSALIE

H932704S-AGB/SCR

mitzi

Embracing the grand millennial trend, Rosalie presents a fresh take on a traditional box lantern. Scalloped and slatted details elevate the clean lines of this 4-light fixture. Additional decorative elements, like the Aged Brass sphere and delicate chainwork, add to the playful composition. Rosalie is available in two sizes and two colors, Soft Cream or Soft Arctic Blue.

FINISHES

AGED BRASS w/ SOFT CREAM

DIMENSIONS / SPECS

Height: 19.5"
Width/Diameter: 13.25"
Length: 13.25"
Minimum Height: 23.75"
Maximum Height: 76.25"
Canopy/Backplate: 4.75"
Hanging Type: 54" Chain
Product Weight: 15.87lb
Canopy/Backplate Shape: Round
Sloped Ceiling Compatible: No
Living Finish: No
Uplight Only: Yes

Shade 1: Glass
Shade 1 Finish: Clear
Shade 1 Top Length: 11.75"
Shade 1 Top Width: 12.75"
Shade 1 Height: 0.125"

ELECTRICAL

Bulb 1
Bulb Included: No
Socket: E12 Candelabra Base
Bulb Type: G16.5
Max Wattage: 8
Bulb Quantity: 4
Cord Type: SPT-1 SILVER W/ TINNED GROUND WIRE
Gem Box Required (2"x3"): No
Dark Sky: No
Convertible: No

Voltage: 120

SHIPPING

Carton 1: 17" x 17" x 17"
Carton 1 Weight: 20lb
Shipping Method: Ground
Country of Origin: VN



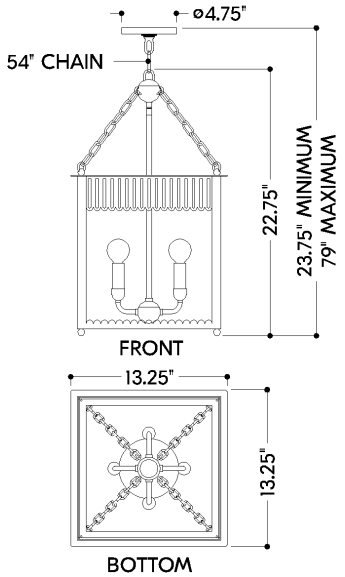

HUDSON VALLEY
LIGHTING GROUP