LUISA

H928101-TRB

mitzi

Luisa is a modern heirloom for the home. Reminiscent of a vintage torch, this elegant sconce is supported by a slender L-shaped arm. While the fluted matte opal shade nods to classical aesthetics, the elongated proportions and minimalist hardware details modernize the fixture. Available in an Aged Brass or True Bronze finish.

FINISHES

True Bronze



DIMENSIONS / SPECS

Height: 23"
Width/Diameter: 4.75"
Canopy/Backplate: 4.75"
Product Weight: 2.38lb
Extension: 5"
Top to Center: 9.25"
Canopy/Backplate Shape: Round
Sloped Ceiling Compatible: No
Living Finish: No
Uplight Only: Yes

Shade 1: Glass
Shade 1 Finish: Opal Matte
Shade 1 Top Width: 2.25"
Shade 1 Bottom L/W: 0" / 3.5"
Shade 1 Height: 7.25"

ELECTRICAL

Bulb 1
Bulb Included: No
Socket: E12 Candelabra Base
Bulb Type: B11
Max Wattage: 8
Bulb Quantity: 1
Cord Type: B & W TEFLON W/ GROUND WIRE
Gem Box Required (2"x3"): No
Dark Sky: No
Convertible: No

Voltage: 120
Gem Box: Not Required

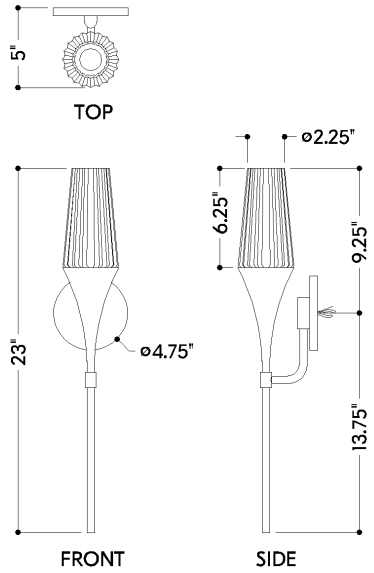

SHIPPING

Carton 1: 13" x 13" x 8"
Carton 1 Weight: 4lb
Shipping Method: Ground
Country of Origin: VN