DAVIDA

H894701L-AGB

mitzi

The Davida pendant takes a heritage silhouette and gives it an update with contemporary materiality. Woven from Natural Rattan, the shade and canopy bring an earthy, yet sophisticated feel to a space. The unique metalwork details are finished in a timeless Aged Brass finish. Part of our Zoe Feldman collection, Davida is available in two sizes.

*Due to the one-of-a-kind nature of the medium, exact colors and patterns may vary slightly from the image shown.

FINISHES

AGED BRASS

DIMENSIONS / SPECS

Height: 19"
Width/Diameter: 30"
Minimum Height: 23.5"
Maximum Height: 75.5"
Canopy/Backplate: 5"
Hanging Type: 54" Chain
Product Weight: 6.6lb
Canopy/Backplate Shape: Round
Sloped Ceiling Compatible: No
Living Finish: No
Uplight Only: No

Shade 1: Rattan
Shade 1 Top Width: 9.25"
Shade 1 Bottom L/W: 0" / 30"
Shade 1 Height: 9"

ELECTRICAL

Bulb 1
Bulb Included: No
Socket: E26 Medium Base
Bulb Type: G40
Max Wattage: 25
Bulb Quantity: 1
Gem Box Required (2"x3"): No
Dark Sky: No
Convertible: No

Voltage: 120

SHIPPING

Carton 1: 32" x 31" x 14"
Carton 1 Weight: 18lb
Shipping Method: Ground
Country of Origin: VN



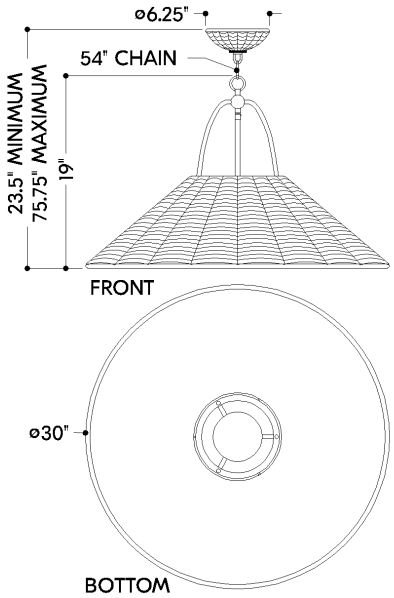

HUDSON VALLEY
LIGHTING GROUP