JOJO

H885101-AGB/SWH

mitzi

Influenced by midcentury design, Jojo features a dome-shaped shade with decorative perforations that allow light to escape. Both the pendant and sconce come in a Soft White finish while the lamp is available in a moody green as an eye-catching accent piece. The pendant features 2 lights within its bowl, optimizing illumination. All variations are elegantly accented in Aged Brass. Part of our Zoe Feldman collection.

FINISHES

AGED BRASS w/ SOFT WHITE

DIMENSIONS / SPECS

Height: 18.75"
Width/Diameter: 7.75"
Canopy/Backplate: 4.75"
Product Weight: 10.43lb
Extension: 8.25"
Top to Center: 10.75"
Canopy/Backplate Shape: Round
Sloped Ceiling Compatible: No
Living Finish: No
Uplight Only: No

Shade 1: Metal
Shade 1 Finish: Soft White
Shade 1 Top Width: 7.75"
Shade 1 Height: 4.25"

ELECTRICAL

Bulb 1
Bulb Included: No
Socket: E26 Medium Base
Bulb Type: A15
Max Wattage: 15
Bulb Quantity: 1
Gem Box Required (2"x3"): No
Dark Sky: No
Convertible: No

Voltage: 120
Gem Box: Not Required

SHIPPING

Carton 1: 11" x 5" x 3"
Carton 1 Weight: 22lb
Shipping Method: Ground
Country of Origin: VN



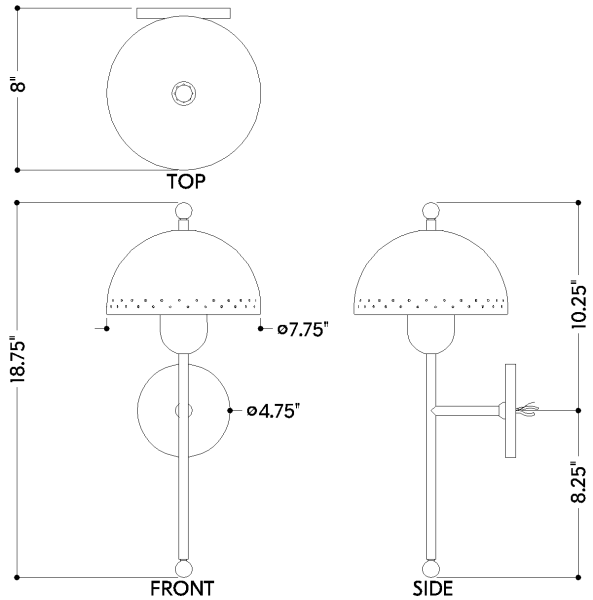

HUDSON VALLEY
LIGHTING GROUP