CORINTHIA

H881701L-AGB

An ode to simplicity, Corinthia adheres to Greek design principles with its slender and elegant ribbed silhouette. A Opal Glass shade gracefully extends and then flares, bringing a dose of decorative minimalist style into any space. Available in multiple sizes, Corinthia can be styled alone, or grouped above a countertop or along a hallway.

FINISHES

AGED BRASS
Coastal Suitable Finish (EPM): No

DIMENSIONS

Height: 19.5"
Width/Diameter: 14"
Minimum Height: 24.25"
Maximum Height: 60"
Canopy/Backplate: 6"
Hanging Type: 1-3" / 1-6" / 1-12" / 1-18" Stems
Product Weight: 11.22lb
Canopy/Backplate Shape: Round
Sloped Ceiling Compatible: No
Living Finish: No
Uplight Only: No

Shade

Shade 1: Glass
Shade 1 Finish: Opal Shiny
Shade 1 Top Width: 4.5"
Shade 1 Bottom L/W: 0" / 14"
Shade 1 Height: 16.5"

ELECTRICAL

Bulb 1
Bulb Included: No
Socket: E26 Medium Base
Bulb Type: G40
Max Wattage: 25
Bulb Quantity: 1
Gem Box Required (2"x3"): No
Dark Sky: No

SHIPPING
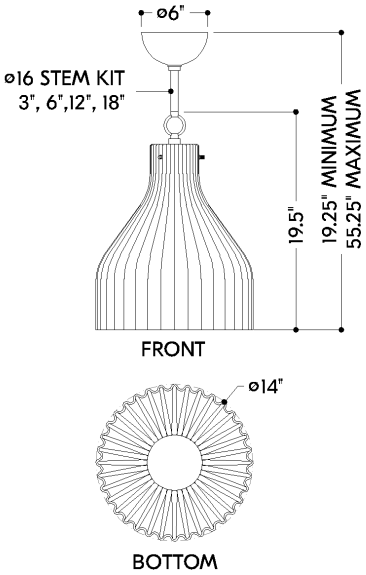
Carton 1: 29" x 21" x 21"
Carton 1 Weight: 15lb
Shipping Method: Ground
Country of Origin: CN