MARIEL

H866101-AGB/SWH

mitzi

In a modernization of a traditional style, the shaded silhouette of Mariel utilizes the harp holding the metal shade as a design detail. The curve of the harp complements the socket cup with a halo-like effect. A rounded finial in Aged Brass provides a finishing touch on top of the shade, which comes in a Soft Navy or Soft White hue.

FINISHES

AGED BRASS w/ SOFT WHITE

DIMENSIONS / SPECS

Height: 12"
Width/Diameter: 9.75"
Canopy/Backplate: 4.75"
Product Weight: 2.29lb
Extension: 10.75"
Top to Center: 9.5"
Canopy/Backplate Shape: Round
Sloped Ceiling Compatible: No
Living Finish: No
Uplight Only: No

Shade 1: Metal
Shade 1 Finish: Soft White
Shade 1 Top Width: 2.25"
Shade 1 Bottom L/W: 0" / 9.75"
Shade 1 Height: 3.25"

ELECTRICAL

Bulb 1
Bulb Included: No
Socket: E12 Candelabra Base
Bulb Type: G16.5
Max Wattage: 8
Bulb Quantity: 1
Gem Box Required (2"x3"): No
Dark Sky: No
Convertible: No

Voltage: 120
Gem Box: Not Required

SHIPPING

Carton 1: 17" x 9" x 13"
Carton 1 Weight: 4lb
Shipping Method: Ground
Country of Origin: VN



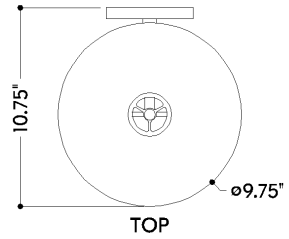

TOP

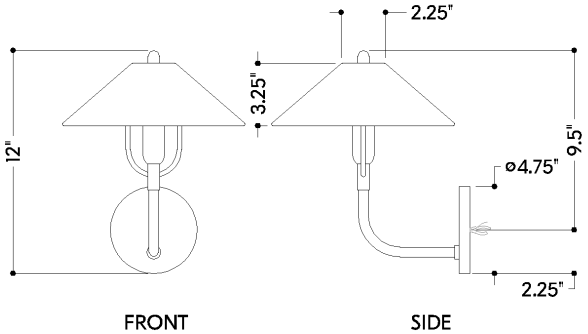

FRONT SIDE

HUDSON VALLEY
LIGHTING GROUP