ELOWEN

H836101S-AOB

mitzi

Breathing new life into a classic picture light design, Elowen features a slender silhouette and integrated LED technology. Supported by ar arched neck, the shade is folded into a tube, leaving a thin opening that allows a band of light to pass through. Available in two sizes in either an Aged Brass or an Aged Old Bronze finish, Elowen provides discreet, yet powerful illumination of wall decor.

FINISHES

AGED BRASS/OLD BRONZE

DIMENSIONS / SPECS

Height: 7.25"
Width/Diameter: 17.5"
Canopy/Backplate: 3"
Product Weight: 2lb
Extension: 8.25"
Top to Center: 6"
Canopy/Backplate Shape: Rectangle
Sloped Ceiling Compatible: No
Living Finish: No
Uplight Only: No
Min Extension: 8"
Max Extension: 9"

Shade 1: Acrylic
Shade 1 Finish: White
Shade 1 Top Length: 16"
Shade 1 Top Width: 0.75"



ELECTRICAL

Bulb 1
Bulb Included: N/A
Socket: Integrated LED
Max Wattage: 13
Bulb Quantity: 1
Dimmer Type: ELV, TRIAC
Gem Box Required (2"x3"): Yes
Dark Sky: No
Convertible: No
CRI: 90
Color Temp.: 3000k
Lumens: 700
Title 24: No
Field Serviceable: Yes
Voltage: 120V

Voltage: 120V

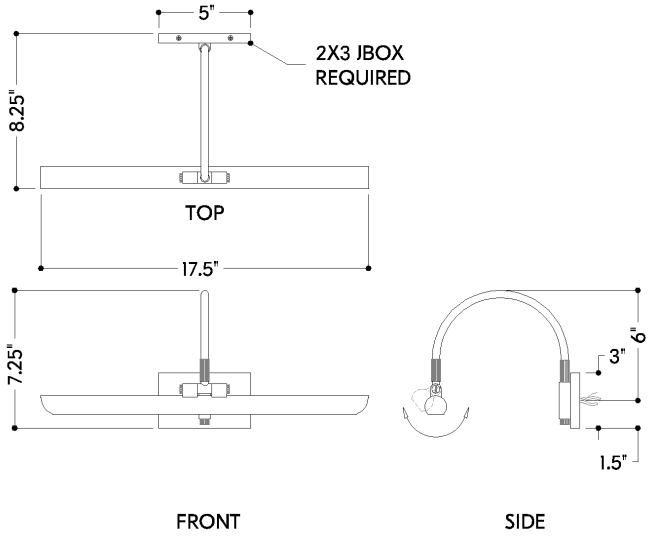

SHIPPING

Carton 1: 21" x 11" x 14"
Carton 1 Weight: 4lb
Shipping Method: Ground
Country of Origin: VN