DALIA

H831101-AGB

mitzi

"Updating a classic silhouette with contemporary materiality, Dalia features a large, tapered shade woven from rattan wicker. The refined metal work is finished in Aged Brass, adding a timeless, vintage quality to the fixture. Available as a 1-light sconce or 3-light chandelier, Dalia introduces a pop of texture and style to any space.

*Due to the one-of-a-kind nature of the medium, exact colors and patterns may vary slightly from the image shown."

FINISHES

AGED BRASS

DIMENSIONS / SPECS

Height: 8.5"
Width/Diameter: 10.5"
Canopy/Backplate: 4.75"
Product Weight: 11.02lb
Extension: 10.75"
Top to Center: 2.25"
Canopy/Backplate Shape: Round
Sloped Ceiling Compatible: No
Living Finish: No
Uplight Only: No

Shade 1: Natural Wicker
Shade 1 Top Width: 2.75"
Shade 1 Bottom L/W: 0" / 10.75"
Shade 1 Height: 4.75"

ELECTRICAL

Bulb 1
Bulb Included: No
Socket: E26 Medium Base
Bulb Type: G16.5
Max Wattage: 8
Bulb Quantity: 1
Gem Box Required (2"x3"): No
Dark Sky: No
Convertible: No

Voltage: 120
Gem Box: Not Required

SHIPPING

Carton 1: 12" x 12" x 8"
Carton 1 Weight: 12lb
Shipping Method: Ground
Country of Origin: VN



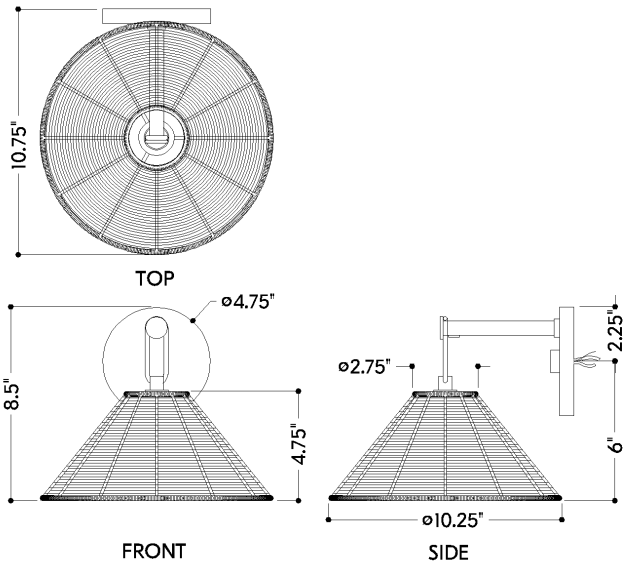

HUDSON VALLEY
LIGHTING GROUP