DESTINY

H825101-AGB

mitzi

Combining the beauty of natural wicker and polished Aged Brass, this coastal-inspired fixture exudes understated elegance. When illuminated, the golden-hued brass gleams through the gray wicker, creating a warm and earthy glow. Available as a sconce, pendant, or floor lamp. Part of THELIFESTYLEDCO® collection.

*Due to the one-of-a-kind nature of the medium, exact colors and patterns may vary slightly from the image shown.

FINISHES

AGED BRASS

DIMENSIONS / SPECS

Height: 11.5"
Width/Diameter: 9.75"
Canopy/Backplate: 4.75"
Product Weight: 2.42lb
Extension: 3.5"
Top to Center: 9"
Canopy/Backplate Shape: Round
Sloped Ceiling Compatible: No
Living Finish: No
Uplight Only: No

Shade 1: Natural Wicker
Shade 1 Top Width: 9"
Shade 1 Height: 1.5"

ELECTRICAL

Bulb 1
Bulb Included: No
Socket: E12 Candelabra Base
Bulb Type: B11
Max Wattage: 8
Bulb Quantity: 1
Gem Box Required (2"x3"): No
Dark Sky: No
Convertible: No

Voltage: 120 VAC
Gem Box: Not Required

SHIPPING

Carton 1: 14" x 14" x 9"
Carton 1 Weight: 3lb
Shipping Method: Ground
Country of Origin: VN



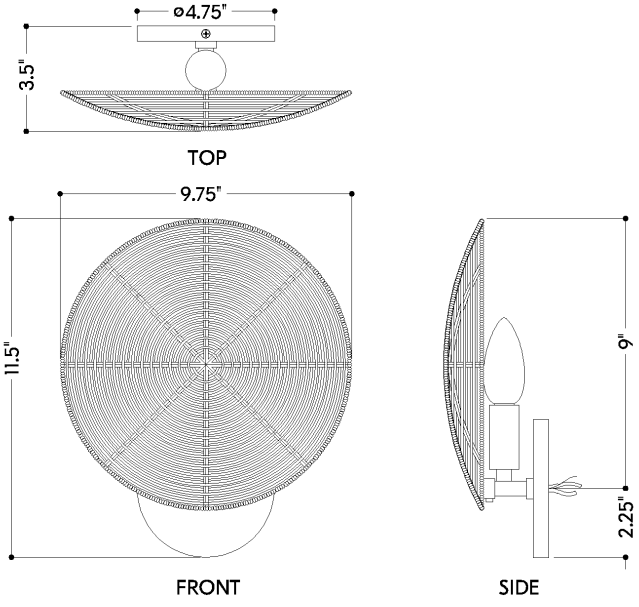

HUDSON VALLEY
LIGHTING GROUP