BAYU

F2616-FOR

TROY LIGHTING

Crafted from handmade paper, the biomorphic form of Bayu floats like a cloud. The natural translucency allows light to seep through the shade, creating a gentle glow. The distinctive vertical seams lend an artisanal note, while the Forged Iron chain feels substantial and antique. Available in two sizes, Bayu provides a poetic and tranquil lighting experience.

FINISHES

FORGED IRON

DIMENSIONS / SPECS

Height: 14.5"
Width/Diameter: 16.25"
Minimum Height: 17.75"
Maximum Height: 88"
Canopy/Backplate: 5"
Hanging Type: 72" Chain
Product Weight: 4.4lb
Canopy/Backplate Shape: Round
Sloped Ceiling Compatible: No
Living Finish: No
Uplight Only: No

Shade 1: Handmade Paper
Shade 1 Finish: White
Shade 1 Bottom L/W: 0" / 16.25"
Shade 1 Height: 11.25"

ELECTRICAL

Bulb 1
Bulb Included: No
Socket: E26 Medium Base
Bulb Type: A19
Max Wattage: 15
Bulb Quantity: 1
Gem Box Required (2"x3"): No
Dark Sky: No
Convertible: No

Voltage: 120

SHIPPING

Carton 1: 18" x 18" x 18"
Carton 1 Weight: 13lb
Shipping Method: Ground
Country of Origin: PH



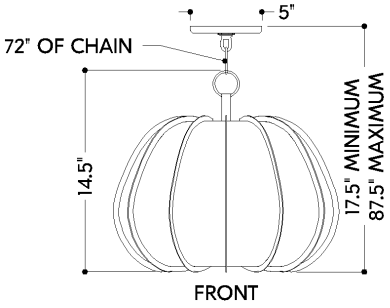

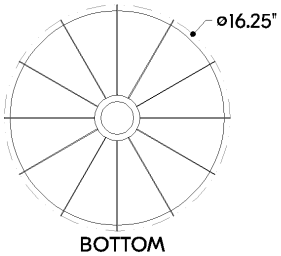

HUDSON VALLEY
LIGHTING GROUP