LANDRY

F1820-BRL

TROY LIGHTING

Two shallow shades are stacked in opposite directions to create the balanced artistry of this coastal pendant. The open weave of the natural abaca fiber shades allows light to filter through both sides, producing a dramatic visual effect. For the finishing touch, Landry dangles from a chunky vintage Gold Leaf chain. Available in two sizes.

*Due to the one-of-a-kind nature of the medium, exact colors and patterns may vary slightly from the image shown.

FINISHES

BRONZE LEAF

DIMENSIONS / SPECS

Height: 10"
Width/Diameter: 20"
Minimum Height: 13"
Maximum Height: 83.25"
Canopy/Backplate: 4.75"
Hanging Type: 72" Chain
Product Weight: 6.6lb
Canopy/Backplate Shape: Round
Sloped Ceiling Compatible: No
Living Finish: No
Uplight Only: Yes

Shade 1: Natural Woven
Shade 1 Finish: Natural Abaca
Shade 1 Top Width: 13.25"
Shade 1 Height: 1.75"
Shade 2: Natural Woven
Shade 2 Finish: Natural Abaca
Shade 2 Top Width: 20"
Shade 2 Height: 2.25"



ELECTRICAL

Bulb 1
Bulb Included: No
Socket: E26 Medium Base
Bulb Type: G25
Max Wattage: 15
Bulb Quantity: 1
Cord Type: SPT-1 SILVER W/ TINNED GROUND WIRE
Gem Box Required (2"x3"): No
Dark Sky: No
Convertible: No

Voltage: 120

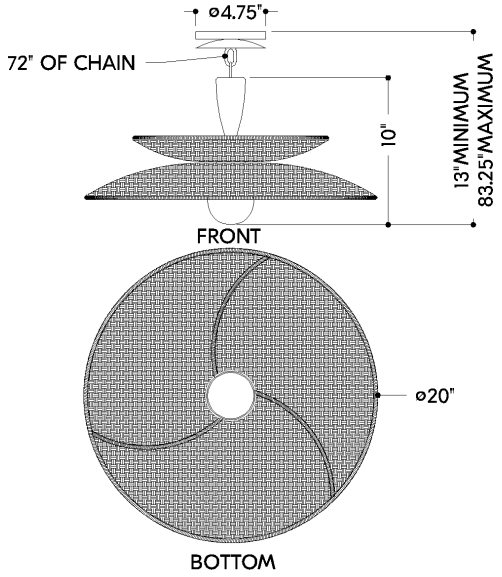

SHIPPING

Carton 1: 24" x 13" x 19"
Carton 1 Weight: 15lb
Shipping Method: Ground
Country of Origin: PH