LEVAN

F1736-VGL

TROY LIGHTING

Three shades of wrapped natural Abaca Cord are nested into one another in the dramatic Leven, creating a layered and voluminous silhouette. A thick Vintage Gold Leaf chain suspends the fixture, adding a contrast to the natural materials. Available in two sizes, this distinctive pendant levitates overhead with a captivating glow.

*Due to the one-of-a-kind nature of the medium, exact colors and patterns may vary slightly from the image shown.

FINISHES

VINTAGE GOLD LEAF

DIMENSIONS / SPECS

Height: 12.5"
Width/Diameter: 36"
Minimum Height: 16.25"
Maximum Height: 86.25"
Canopy/Backplate: 6"
Hanging Type: 72" Chain
Product Weight: 13.2lb
Canopy/Backplate Shape: Round
Sloped Ceiling Compatible: No
Living Finish: No
Uplight Only: No

Shade 1: Abaca
Shade 1 Finish: Natural
Shade 1 Top Width: 3"
Shade 1 Bottom L/W: 0" / 36"
Shade 1 Height: 3.58"
Shade 2: Abaca
Shade 2 Finish: Natural
Shade 2 Top Width: 3"
Shade 2 Bottom L/W: 0" / 24"
Shade 2 Height: 6"

ELECTRICAL

Bulb 1
Bulb Included: No
Socket: E26 Medium Base
Bulb Type: G40
Max Wattage: 25
Bulb Quantity: 1
Gem Box Required (2"x3"): No
Dark Sky: No
Convertible: No

Voltage: 120

SHIPPING

Carton 1: 41" x 41" x 17"
Carton 1 Weight: 32lb
Shipping Method: Truck Only
Country of Origin: PH



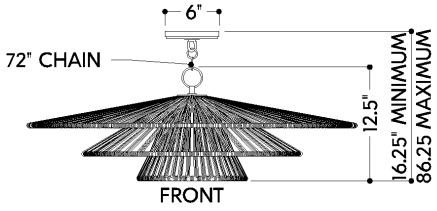

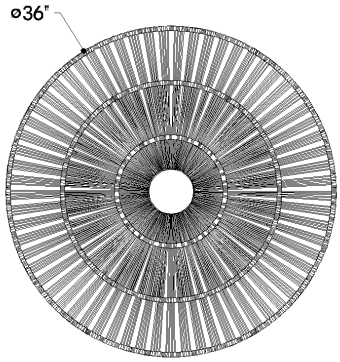

HUDSON VALLEY
LIGHTING GROUP