LONNIE

F1615-VGL

TROY LIGHTING

Tipping its cap to designer Hans-Agne Jakobsson, Lonnie rethinks the materiality of his classic umbrella-shaped shade. In this interpretation, the frame of the shade is wrapped in Bleached Abaca rope, allowing light to pass through. As a design detail, the Vintage Gold Leaf stem suspending the shade appears to pierce through the entire fixture, finishing in a decorative sphere. Lonnie is available in two sizes with 3 or 4 lights. *Due to the one-of-a-kind nature of the medium, exact colors and patterns may vary slightly from the image shown.

FINISHES

VINTAGE GOLD LEAF

DIMENSIONS / SPECS

Height: 20"
Width/Diameter: 15.25"
Minimum Height: 23.75"
Maximum Height: 93.75"
Canopy/Backplate: 5"
Hanging Type: 72" Chain
Product Weight: 8.8lb
Canopy/Backplate Shape: Round
Sloped Ceiling Compatible: No
Living Finish: No
Uplight Only: No

Shade 1: Abaca
Shade 1 Finish: Bleached
Shade 1 Bottom L/W: 0" / 15.25"
Shade 1 Height: 11.5"

ELECTRICAL

Bulb 1
Bulb Included: No
Socket: E12 Candelabra Base
Bulb Type: B11
Max Wattage: 8
Bulb Quantity: 3
Gem Box Required (2"x3"): No
Dark Sky: No
Convertible: No

Voltage: 120

SHIPPING

Carton 1: 20" x 20" x 19"
Carton 1 Weight: 19lb
Shipping Method: Ground
Country of Origin: PH



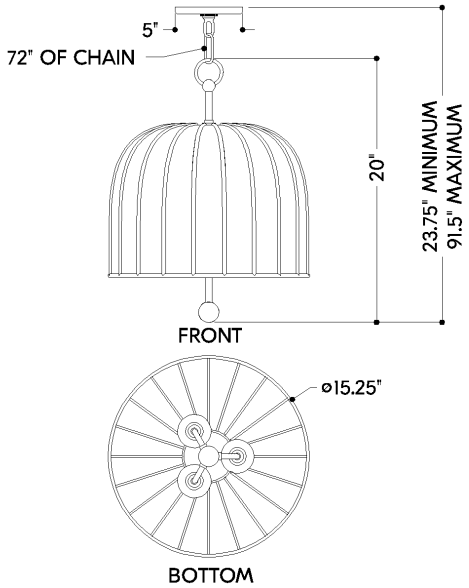

HUDSON VALLEY
LIGHTING GROUP