AZAR

F1420-VGL

TROY LIGHTING

French Riviera finesse meets mid-century modernism in the Azar pendant. The large drum shade is wrapped entirely in Bleached Abaca cord, allowing light to shine through. Finished in Vintage Gold Leaf, the angular frame takes its cues from vintage iron lighting as it peaks out from under the shade. Available in two sizes with either 4 or 6 lights, Azar provides a sophisticated lighting experience.

*Due to the one-of-a-kind nature of the medium, exact colors and patterns may vary slightly from the image shown.

FINISHES

VINTAGE GOLD LEAF

DIMENSIONS / SPECS

Height: 15.75"
Width/Diameter: 20.5"
Minimum Height: 18.25"
Maximum Height: 89"
Canopy/Backplate: 5.5"
Hanging Type: 72" Chain
Product Weight: 8.8lb
Canopy/Backplate Shape: Round
Sloped Ceiling Compatible: No
Living Finish: No
Uplight Only: No

Shade 1: Abaca
Shade 1 Finish: Bleached
Shade 1 Top Width: 16.25"
Shade 1 Bottom L/W: 0" / 20.5"
Shade 1 Height: 8"

ELECTRICAL

Bulb 1
Bulb Included: No
Socket: E12 Candelabra Base
Bulb Type: G16.5
Max Wattage: 8
Bulb Quantity: 4
Gem Box Required (2"x3"): No
Dark Sky: No
Convertible: No

Voltage: 120

SHIPPING

Carton 1: 25" x 25" x 21"
Carton 1 Weight: 22lb
Shipping Method: Ground
Country of Origin: PH



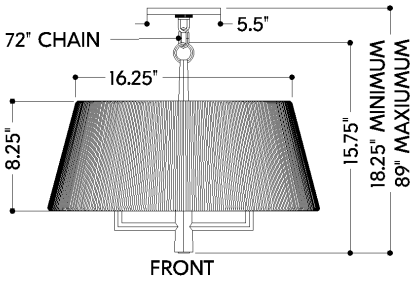

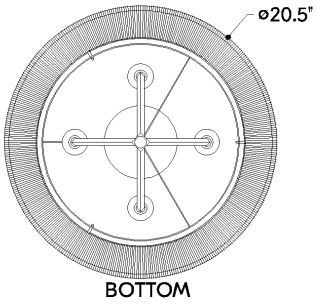

HUDSON VALLEY
LIGHTING GROUP