# CANNES

B3123-BRZ

TROY LIGHTING

Inspired by the French Riviera, Cannes has an elegant ease characterized by its refined profile and gently curved edges. The flush mount offers an efficient LED light source. The layered construction of the sconce includes a Clear Glass exterior and an Opal Glass interior, while the flush mount features a single Opal glass shade suspended under a Bronze shade.

## FINISHES

BRONZE
Coastal Suitable Finish (EPM): No

## DIMENSIONS / SPECS

Height: 23"
Width/Diameter: 8"
Canopy/Backplate: 4.75"
Product Weight: 11.02lb
Extension: 9.25"
Top to Center: 4.25"
Canopy/Backplate Shape: Rectangle
Sloped Ceiling Compatible: No
Living Finish: No
Uplight Only: No

Shade 1: Glass
Shade 1 Finish: Opal Glossy
Shade 1 Top Length: 4.75"
Shade 1 Bottom L/W: 0" / 4.75"
Shade 1 Height: 16.5"
Shade 2: Glass
Shade 2 Finish: Clear
Shade 2 Top Width: 7.75"
Shade 2 Bottom L/W: 0" / 7.75"
Shade 2 Height: 16.75"

## ELECTRICAL

Bulb 1
Bulb Included: No
Socket: E26 Medium Base
Bulb Type: T10-9
Max Wattage: 15
Bulb Quantity: 1
Gem Box Required (2"x3"): No
Dark Sky: No
Convertible: No

Voltage: 120

## SHIPPING

Carton 1: 32" x 14" x 11"
Carton 1 Weight: 15lb
Shipping Method: Ground
Country of Origin: VN



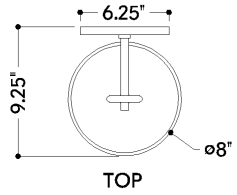

TOP

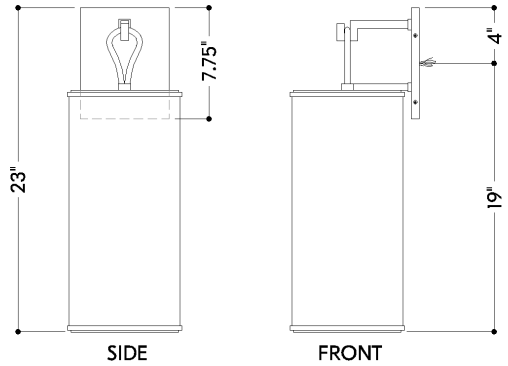

SIDE FRONT

HUDSON VALLEY
LIGHTING GROUP