ADLER

B2513-PBR

TROY LIGHTING

Inspired by a Coquina clam, this sconce features a Patina Brass shell-shaped reflector with a striking mesh-like surface. The inner shade simultaneously conceals the light source while washing light onto the reflector. The delicate cast sprite glass appropriately resembles bubbles in water. Designed to be layered with other lighting, Adler makes a splash in small spaces.

FINISHES

PATINA BRASS

DIMENSIONS / SPECS

Height: 12.5"
Width/Diameter: 9.75"
Canopy/Backplate: 4.25"
Product Weight: 5.06lb
Extension: 4.25"
Top to Center: 9.25"
Canopy/Backplate Shape: Round
Sloped Ceiling Compatible: No
Living Finish: No
Uplight Only: No

Shade 1: Cast Glass
Shade 1 Finish: Sprite
Shade 1 Top Length: 9.25"
Shade 1 Top Width: 4.75"
Shade 1 Height: 2.25"
Shade 2: Cast Glass
Shade 2 Finish: Sprite
Shade 2 Top Length: 9.25"
Shade 2 Top Width: 4.75"
Shade 2 Height: 2.25"



ELECTRICAL

Bulb 1
Bulb Included: No
Socket: E26 Medium Base
Bulb Type: T10-5.5
Max Wattage: 15
Bulb Quantity: 1
Cord Type: B & W TEFLON W/ GROUND WIRE
Gem Box Required (2"x3"): No
Dark Sky: No
Convertible: No

Voltage: 120
Gem Box: Not Required

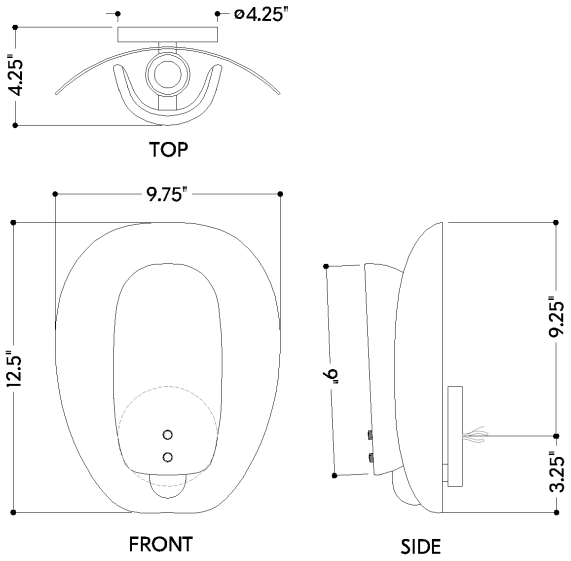

SHIPPING

Carton 1: 16" x 12" x 6"
Carton 1 Weight: 7lb
Shipping Method: Ground
Country of Origin: VN