COLE

B2220-TBK

TROY LIGHTING

Artfully wrapped into a tube-like shape, the metal frame of Cole leaves a slender opening for light to escape, allowing for a mesmerizing play of shadows and illumination. The organic feel of the silhouette is contrasted by the robust Textured Black finish, which provides a bold appearance. Available in two sizes, Cole is a unique and artful exterior fixture.

FINISHES

TEXTURE BLACK
Coastal Suitable Finish (EPM): No

DIMENSIONS / SPECS

Height: 20"
Width/Diameter: 7.75"
Canopy/Backplate: 4.75"
Product Weight: 3.87lb
Extension: 4"
Top to Center: 10"
Canopy/Backplate Shape: Round
Sloped Ceiling Compatible: No
Living Finish: No
Uplight Only: No

ELECTRICAL

Bulb 1
Bulb Included: N/A
Socket: Integrated LED
Max Wattage: 15
Bulb Quantity: 1
Dimmer Type: ELV, TRIAC
Gem Box Required (2"x3"): No
Dark Sky: No
Convertible: No
CRI: 90
Color Temp.: 3000k
Lumens: 50
Title 24: No
Field Serviceable: No
Voltage: 120V

Voltage: 120V

SHIPPING

Carton 1: 24" x 10" x 7"
Carton 1 Weight: 8lb
Shipping Method: Ground
Country of Origin: TH



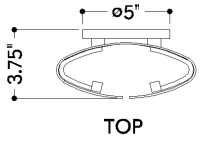

TOP

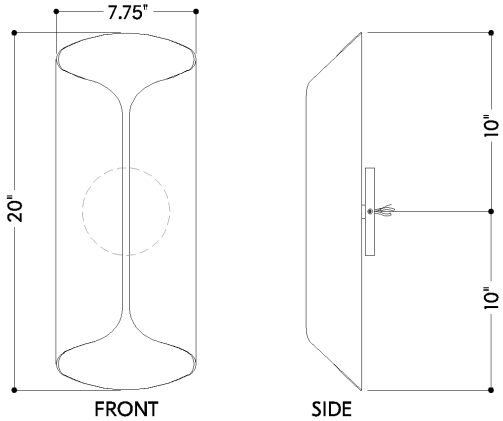

FRONT SIDE

HUDSON VALLEY
LIGHTING GROUP