REX

B2218-PBR

TROY LIGHTING

Playing with texture and form, Rex features a striking layered glass silhouette with a clear fluted interior and a smoke exterior. The darker glass creates an artful and soft diffusion of light while harmonizing with the rich hues of the Patina Brass finish on the metalwork. Rex is available as either a 1 or 2-light sconce.

FINISHES

PATINA BRASS

DIMENSIONS / SPECS

Height: 17.75"
Width/Diameter: 4.75"
Canopy/Backplate: 4.75"
Product Weight: 3.97lb
Extension: 5.25"
Top to Center: 8.75"
Canopy/Backplate Shape: Round
Sloped Ceiling Compatible: No
Living Finish: No
Uplight Only: No

Shade 1: Glass
Shade 1 Finish: Plated Smoke
Shade 1 Top Width: 4"
Shade 1 Height: 6.5"
Shade 2: Glass
Shade 2 Finish: Clear Ribbed
Shade 2 Top Width: 2.25"
Shade 2 Height: 7.75"

ELECTRICAL

Bulb 1
Bulb Included: No
Socket: E26 Medium Base
Bulb Type: T10-5.5
Max Wattage: 15
Bulb Quantity: 2
Gem Box Required (2"x3"): No
Dark Sky: No
Convertible: No

Voltage: 120
Gem Box: Not Required

SHIPPING

Carton 1: 17" x 13" x 12"
Carton 1 Weight: 6lb
Shipping Method: Ground
Country of Origin: VN



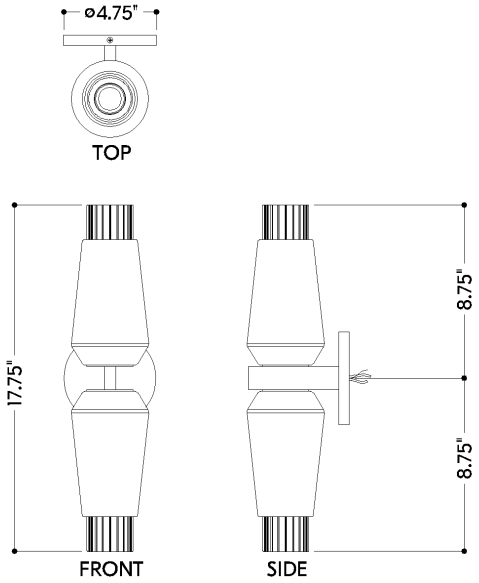

HUDSON VALLEY
LIGHTING GROUP