ELTON

B1519-PBR

TROY LIGHTING

Inspired by a traditional torch sconce, Elton features sleek metalwork with finely crafted brass details. Melding industrial and modernist influences, a fluted glass cylinder elegantly shades the light source. The warm Patina Brass finish rounds out this stylish sconce.

FINISHES

PATINA BRASS

DIMENSIONS / SPECS

Height: 18.5"
Width/Diameter: 2.75"
Canopy/Backplate: 2.75"
Product Weight: 2.31lb
Extension: 4.25"
Top to Center: 9"
Canopy/Backplate Shape: Rectangle
Sloped Ceiling Compatible: No
Living Finish: No
Uplight Only: No

Shade 1: Glass
Shade 1 Finish: Clear Fluted Borosilicate
Shade 1 Top Width: 2.5"
Shade 1 Height: 11"

ELECTRICAL

Bulb 1
Bulb Included: No
Socket: E26 Medium Base
Bulb Type: T10-9
Max Wattage: 15
Bulb Quantity: 1
Gem Box Required (2"x3"): Yes
Dark Sky: No
Convertible: No

Voltage: 120
Gem Box: Required

SHIPPING

Carton 1: 15" x 9" x 6"
Carton 1 Weight: 3lb
Shipping Method: Ground
Country of Origin: VN



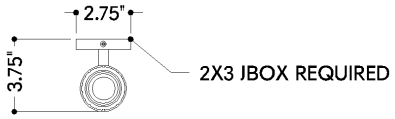

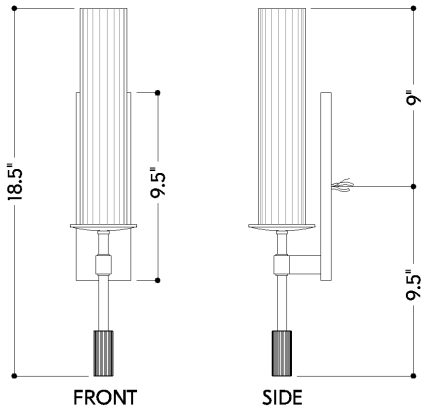

HUDSON VALLEY
LIGHTING GROUP