BROGAN

B1122-PBR

TROY LIGHTING

Taking cues from mid-century design aesthetics, Brogan elevates a simple silhouette with bold proportions. Supported by gracefully curved arms in a rich Patina Brass finish, two oversized Seedy Opal Glass globes are suspended at different levels. This versatile sconce offers flexibility at installation, enabling the piece to be positioned right or left by pivoting the arms relative to the backplate.

FINISHES

PATINA BRASS



DIMENSIONS / SPECS

Height: 22.25"
Width/Diameter: 12.75"
Canopy/Backplate: 4.75"
Product Weight: 6.16lb
Extension: 9.75"
Top to Center: 2.25"
Canopy/Backplate Shape: Round
Sloped Ceiling Compatible: No
Living Finish: No
Uplight Only: No

Shade 1: Glass
Shade 1 Finish: Opal Seedy
Shade 1 Top Width: 9"
Shade 1 Height: 8.5"
Shade 2: Glass
Shade 2 Finish: Opal Seedy
Shade 2 Top Length: 1"
Shade 2 Top Width: 7"
Shade 2 Height: 6.5"

ELECTRICAL

Bulb 1
Bulb Included: No
Socket: E26 Medium Base
Bulb Type: A19
Max Wattage: 15
Bulb Quantity: 2
Gem Box Required (2"x3"): No
Dark Sky: No
Convertible: No

Voltage: 120
Gem Box: Not Required

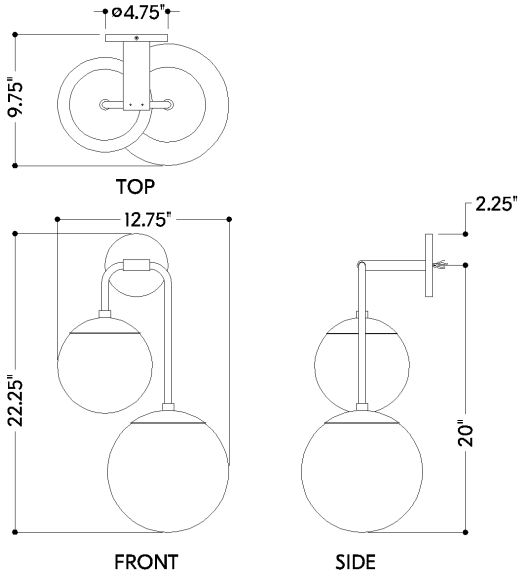

SHIPPING

Carton 1: 22" x 22" x 14"
Carton 1 Weight: 11lb
Shipping Method: Ground
Country of Origin: VN