MOORE

9017-AGB

HUDSON VALLEY LIGHTING

FINISHES

AGED BRASS

DIMENSIONS / SPECS

Height: 66"
Width/Diameter: 66"
Length: 66"
Minimum Height: 66"
Maximum Height: 66"
Canopy/Backplate: 6"
Hanging Type: 108" Premium Composite Cord
Product Weight: 66lb
Extension: 66"
Top to Center: 66"
Canopy/Backplate Shape: Round
Sloped Ceiling Compatible: No
Living Finish: Yes
Uplight Only: Yes
Min Extension: 66"
Max Extension: 66"

Shade 1: Alabaster
Shade 1 Top Width: 9"
Shade 1 Height: 4"
Shade 2: Glass
Shade 2 Finish: Clear
Shade 2 Top Width: 17"
Shade 2 Bottom L/W: 0" / 10.5"
Shade 2 Height: 8.25"

ELECTRICAL

Bulb 1
Bulb Included: N/A
Socket: Integrated LED
Max Wattage: 13
Bulb Quantity: 1
Wire Length: 500mm
Cord Type: ! New Cord Type
Dimmer Type: Incandescent
Switch Type: ON/OFF STOMP SWITCH
Gem Box Required (2"x3"): Yes
Dark Sky: Yes
Convertible: No
CRI: 66
Color Temp.: 66k
Lumens: 66
Title 24: Yes
Field Serviceable: No
Voltage: 120V

Voltage: 120V

Battery
Battery Powered: Yes
Battery Included: Yes
Battery Life: ! New Battery Life !



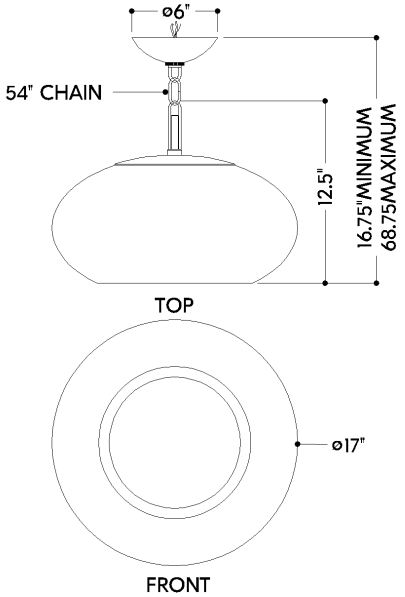

MOORE

9017-AGB

HUDSON VALLEY LIGHTING

SHIPPING

Carton 1: 29" x 29" x 12"
Carton 1 Weight: 19lb
Shipping Method: Ground
Country of Origin: VN