MELBOURNE

8530-AGB

HUDSON VALLEY LIGHTING

A contemporary take on a picture light, Melbourne is subtle and discreet. The design features a long LED bar supported by a sleek metal frame, ensuring optimal illumination with minimal visual distractions. Available in three sizes and two finishes; Aged Brass and Old Bronze.

FINISHES

AGED BRASS

DIMENSIONS / SPECS

Height: 2.75"
Width/Diameter: 30"
Canopy/Backplate: 16.5"
Product Weight: 4.63lb
Extension: 7.25"
Top to Center: 1.5"
Canopy/Backplate Shape: Rectangle
Sloped Ceiling Compatible: No
Living Finish: Yes
Uplight Only: No
Min Extension: 7.25"
Max Extension: 9.75"

Shade 1: Acrylic
Shade 1 Finish: White
Shade 1 Top Length: 29.75"
Shade 1 Top Width: 0.75"



ELECTRICAL

Bulb 1
Bulb Included: N/A
Socket: Integrated LED
Max Wattage: 12
Bulb Quantity: 1
Dimmer Type: TRIAC
Gem Box Required (2"x3"): Yes
Dark Sky: No
Convertible: No
CRI: 90
Color Temp.: 2700k
Lumens: 325
Title 24: No
Field Serviceable: Yes
Voltage: 120V

Voltage: 120V

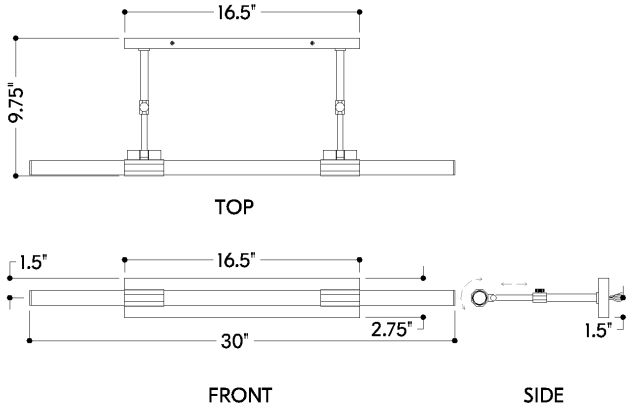

SHIPPING

Carton 1: 34" x 12" x 7"
Carton 1 Weight: 7lb
Shipping Method: Ground
Country of Origin: VN