DARCIA

8319-AGB

HUDSON VALLEY LIGHTING

Smooth Blonchino Piastra glass teardrops are suspended in tiers from the waterfall-like Darcia. Reminiscent of shells or falling rain, the hand-blown glass pieces sparkle as they soften and diffuse the light. Available as a sconce, or as a chandelier in three sizes, Darcia makes a poetic and organic statement.

*Due to the one-of-a-kind nature of the medium, exact colors and patterns may vary slightly from the image shown.

FINISHES

AGED BRASS

DIMENSIONS / SPECS

Height: 66"
Width/Diameter: 66"
Length: 66"
Minimum Height: 66"
Maximum Height: 66"
Canopy/Backplate: 5.5"
Hanging Type: 108" Premium Composite Cord
Product Weight: 66lb
Extension: 66"
Top to Center: 66"
Canopy/Backplate Shape: Round
Sloped Ceiling Compatible: No
Living Finish: Yes
Uplight Only: Yes
Min Extension: 66"
Max Extension: 66"

Shade 1: Blonchino
Shade 1 Top Length: 8.25"
Shade 1 Top Width: 4.5"
Shade 1 Height: 1.25"

ELECTRICAL

Bulb 1
Bulb Included: No
Socket: E12 Candelabra Base
Bulb Type: G16.5
Max Wattage: 8
Bulb Quantity: 2
Wire Length: 500mm
Cord Type: ! New Cord Type
Dimmer Type: Incandescent
Switch Type: ON/OFF STOMP SWITCH
Gem Box Required (2"x3"): Yes
Dark Sky: Yes
Convertible: No
CRI: 66
Color Temp.: 66k
Lumens: 66
Title 24: Yes
Field Serviceable: No
Voltage: 120 VAC

Voltage: 120 VAC
Gem Box: Required



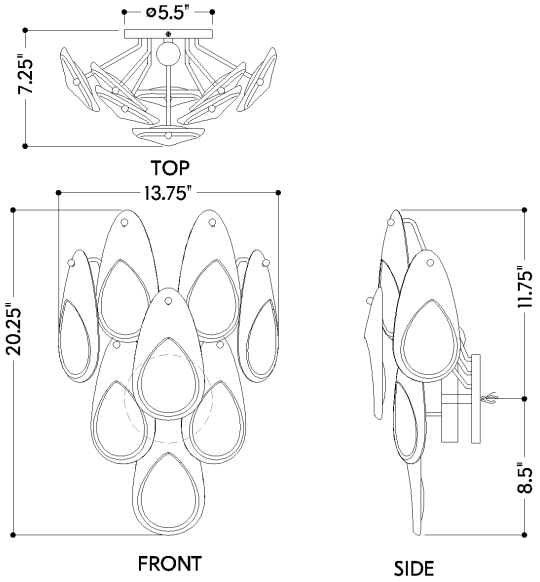

DARCIA

8319-AGB

HUDSON VALLEY LIGHTING

Battery

Battery Powered: Yes
Battery Included: Yes
Battery Life: ! New Battery Life !

SHIPPING

Carton 1: 17" x 17" x 17"
Carton 1 Weight: 12lb
Shipping Method: Ground
Country of Origin: VN