PINE ISLAND

7931-AGB

HUDSON VALLEY LIGHTING

Rendered in clear etched glass, the abstracted floral shade of Pine Island creates a soft, romantic lighting moment. While the top edge of the fixture softly undulates, the center of the glass is grooved to fit securely into the metal clasp. The minimalist frame allows the focus to stay on the delicate beauty of the shade.

FINISHES

AGED BRASS

DIMENSIONS / SPECS

Height: 66"
Width/Diameter: 66"
Length: 66"
Minimum Height: 66"
Maximum Height: 66"
Canopy/Backplate: 4.75"
Hanging Type: 108" Premium Composite Cord
Product Weight: 66lb
Extension: 66"
Top to Center: 66"
Canopy/Backplate Shape: Round
Sloped Ceiling Compatible: No
Living Finish: Yes
Uplight Only: Yes
Min Extension: 66"
Max Extension: 66"

Shade 1: Glass
Shade 1 Finish: Clear Inside Etched
Shade 1 Top Width: 5"
Shade 1 Bottom L/W: 0" / 2"
Shade 1 Height: 11.75"



ELECTRICAL

Bulb 1
Bulb Included: No
Socket: E12 Candelabra Base
Bulb Type: B11
Max Wattage: 10
Bulb Quantity: 1
Wire Length: 500mm
Cord Type: ! New Cord Type
Dimmer Type: Incandescent
Switch Type: ON/OFF STOMP SWITCH
Gem Box Required (2"x3"): Yes
Dark Sky: Yes
Convertible: No

CRI: 66
Color Temp.: 66k
Lumens: 66
Title 24: Yes
Field Serviceable: No
Voltage: 120

Voltage: 120
Gem Box: Required

Battery
Battery Powered: Yes
Battery Included: Yes
Battery Life: ! New Battery Life !

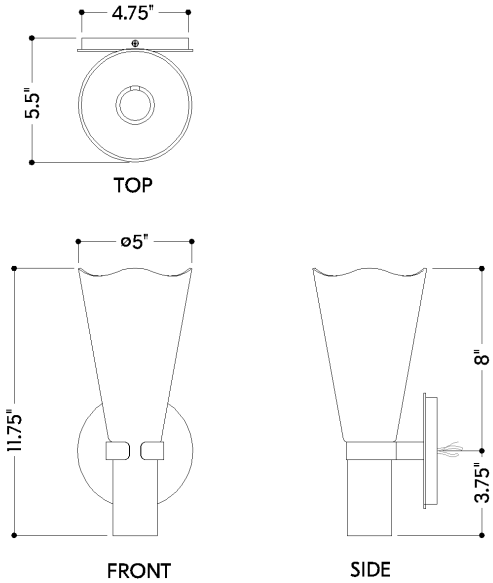

PINE ISLAND

7931-AGB

HUDSON VALLEY LIGHTING

SHIPPING

Carton 1: 15" x 13" x 8"
Carton 1 Weight: 4lb
Shipping Method: Ground
Country of Origin: VN