LORIMER

7922-AGB

HUDSON VALLEY LIGHTING

An elegant capsule-shaped sconce featuring a large opal glossy glass bulb, Lorimer dangles like a lantern over small spaces. It is designed as a feature light or can be hung in multiples along a hallway for maximum impact. Based on your chosen finish, it can appear refined with shiny Aged Brass or industrial with a matte Black Brass finish.

FINISHES

AGED BRASS

DIMENSIONS / SPECS

Height: 66"
Width/Diameter: 66"
Length: 66"
Minimum Height: 66"
Maximum Height: 66"
Canopy/Backplate: 4.75"
Hanging Type: 108" Premium Composite Cord
Product Weight: 66lb
Extension: 66"
Top to Center: 66"
Canopy/Backplate Shape: Round
Sloped Ceiling Compatible: No
Living Finish: Yes
Uplight Only: Yes
Min Extension: 66"
Max Extension: 66"

Shade 1: Acrylic
Shade 1 Finish: White
Shade 1 Top Width: 1.75"
Shade 1 Height: 11"
Shade 2: Glass
Shade 2 Finish: Opal Shiny
Shade 2 Top Width: 4"
Shade 2 Height: 12.5"

ELECTRICAL

Bulb 1
Bulb Included: N/A
Socket: Integrated LED
Max Wattage: 8
Bulb Quantity: 1
Wire Length: 500mm
Cord Type: ! New Cord Type
Dimmer Type: Incandescent
Switch Type: ON/OFF STOMP SWITCH
Gem Box Required (2"x3"): Yes
Dark Sky: Yes
Convertible: No
CRI: 66
Color Temp.: 66k
Lumens: 66
Title 24: Yes
Field Serviceable: No
Voltage: 120V

Voltage: 120V
Gem Box: Required

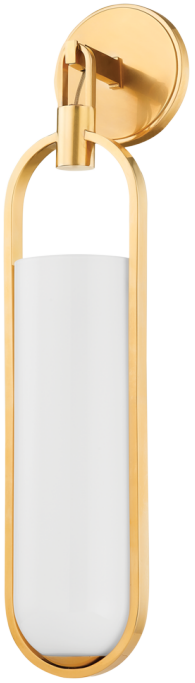

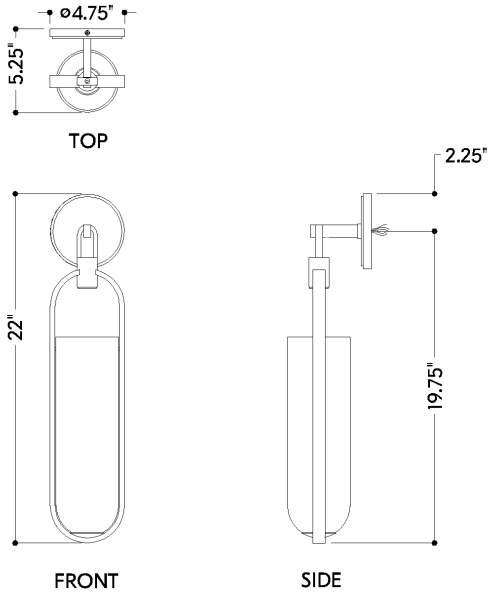

LORIMER

7922-AGB

HUDSON VALLEY LIGHTING

Battery

Battery Powered: Yes
Battery Included: Yes
Battery Life: ! New Battery Life !

SHIPPING

Carton 1: 26" x 16" x 8"
Carton 1 Weight: 7lb
Shipping Method: Ground
Country of Origin: VN