CASSIAN

7910-VGL

HUDSON VALLEY LIGHTING

Inspired by Parisian design aesthetics, this graceful tiered glass chandelier is a showstopper. Slender plates of fluted piastre glass are secured to a delicate framework with fine, jewelry-like pins. The glass features an optic chevron pattern that mimics the pattern on leaves, adding textural depth. Cassian is available with 10 or 18 lights.

FINISHES

VINTAGE GOLD LEAF

DIMENSIONS / SPECS

Height: 66"
Width/Diameter: 66"
Length: 66"
Minimum Height: 66"
Maximum Height: 66"
Canopy/Backplate: 7"
Hanging Type: 108" Premium Composite Cord
Product Weight: 66lb
Extension: 66"
Top to Center: 66"
Canopy/Backplate Shape: Round
Sloped Ceiling Compatible: No
Living Finish: Yes
Uplight Only: Yes
Min Extension: 66"
Max Extension: 66"

Shade 1: Cast Glass
Shade 1 Finish: Light Bronze
Shade 1 Top Length: 15"
Shade 1 Top Width: 5.5"
Shade 1 Bottom L/W: 0" / 4"
Shade 1 Height: 1"

ELECTRICAL

Bulb 1
Bulb Included: No
Socket: E12 Candelabra Base
Bulb Type: B11
Max Wattage: 10
Bulb Quantity: 10
Wire Length: 500mm
Cord Type: ! New Cord Type
Dimmer Type: Incandescent
Switch Type: ON/OFF STOMP SWITCH
Gem Box Required (2"x3"): Yes
Dark Sky: Yes
Convertible: No
CRI: 66
Color Temp.: 66k
Lumens: 66
Title 24: Yes
Field Serviceable: No
Voltage: 120

Voltage: 120

Battery
Battery Powered: Yes
Battery Included: Yes
Battery Life: ! New Battery Life !



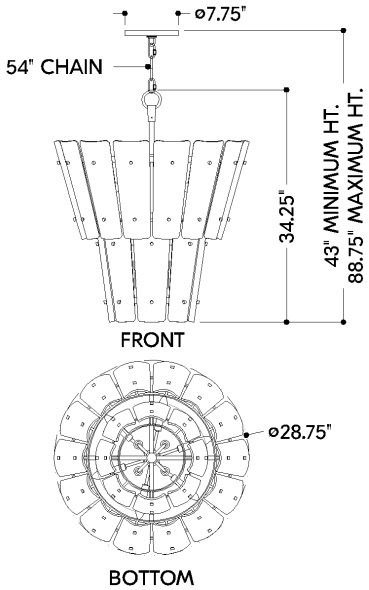

CASSIAN

7910-VGL

HUDSON VALLEY LIGHTING

SHIPPING

Carton 1: 31" x 31" x 27"
Carton 1 Weight: 84lb
Shipping Method: Truck Only
Country of Origin: VN