HOLMDEL

7803-AGB

HUDSON VALLEY LIGHTING

Marrying artistry with innovation, slabs of natural alabaster are illuminated by LED technology in this enchanting fixture. Supported by an Aged Brass framework, each alabaster shape is entirely unique, enhancing the bespoke nature of the composition. As a sconce or semi-flush in two sizes, Holmdel is a treasure of modern design.

*Due to the one-of-a-kind nature of the medium, exact colors and patterns may vary slightly from the image shown.

FINISHES

AGED BRASS

DIMENSIONS / SPECS

Height: 66"
Width/Diameter: 66"
Length: 66"
Minimum Height: 66"
Maximum Height: 66"
Canopy/Backplate: 4.75"
Hanging Type: 108" Premium Composite Cord
Product Weight: 66lb
Extension: 66"
Top to Center: 66"
Canopy/Backplate Shape: Rectangle
Sloped Ceiling Compatible: No
Living Finish: Yes
Uplight Only: Yes
Min Extension: 66"
Max Extension: 66"

Shade 1: Alabaster
Shade 1 Top Length: 6.75"
Shade 1 Top Width: 6.5"
Shade 1 Height: 0.5"
Shade 2: Alabaster
Shade 2 Top Length: 11.5"
Shade 2 Top Width: 9.75"
Shade 2 Height: 0.5"



ELECTRICAL

Bulb 1
Bulb Included: N/A
Socket: Integrated LED
Max Wattage: 12
Bulb Quantity: 3
Wire Length: 500mm
Cord Type: ! New Cord Type
Dimmer Type: Incandescent
Switch Type: ON/OFF STOMP SWITCH
Gem Box Required (2"x3"): Yes
Dark Sky: Yes
Convertible: No
CRI: 66
Color Temp.: 66k
Lumens: 66
Title 24: Yes
Field Serviceable: No
Voltage: 120V

Voltage: 120V
Gem Box: Required

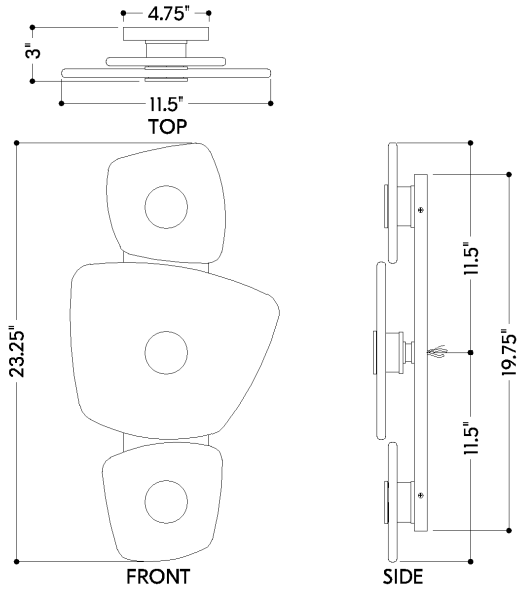

HOLMDEL

7803-AGB

HUDSON VALLEY LIGHTING

Battery

Battery Powered: Yes
Battery Included: Yes
Battery Life: ! New Battery Life !

SHIPPING

Carton 1: 23" x 19" x 7"
Carton 1 Weight: 14lb
Shipping Method: Ground
Country of Origin: VN