NEW WINDSOR

7717-AGB

HUDSON VALLEY LIGHTING

The artful totemic design of New Windsor elevates a traditional lamp silhouette by adding an upward-facing bowl made from natural alabaster. Taking the place of a bobeche, the milky stone is washed with light, creating a subtle glowing effect. Finished in Aged Brass, a bullet-shaped tail complements the soft lines of the stacked forms.

*Due to the one-of-a-kind nature of the medium, exact colors and patterns may vary slightly from the image shown.

FINISHES

AGED BRASS

DIMENSIONS / SPECS

Height: 66"
Width/Diameter: 66"
Length: 66"
Minimum Height: 66"
Maximum Height: 66"
Canopy/Backplate: 4.75"
Hanging Type: 108" Premium Composite Cord
Product Weight: 66lb
Extension: 66"
Top to Center: 66"
Canopy/Backplate Shape: Round
Sloped Ceiling Compatible: No
Living Finish: Yes
Uplight Only: Yes
Min Extension: 66"
Max Extension: 66"

Shade 1: Linen
Shade 1 Finish: White
Shade 1 Top Width: 4"
Shade 1 Bottom L/W: 0" / 7.25"
Shade 1 Height: 6.25"

ELECTRICAL

Bulb 1
Bulb Included: No
Socket: E12 Candelabra Base
Bulb Type: B11
Max Wattage: 10
Bulb Quantity: 1
Wire Length: 500mm
Cord Type: ! New Cord Type
Dimmer Type: Incandescent
Switch Type: ON/OFF STOMP SWITCH
Gem Box Required (2"x3"): Yes
Dark Sky: Yes
Convertible: No
CRI: 66
Color Temp.: 66k
Lumens: 66
Title 24: Yes
Field Serviceable: No
Voltage: 120

Voltage:
Gem Box: Required

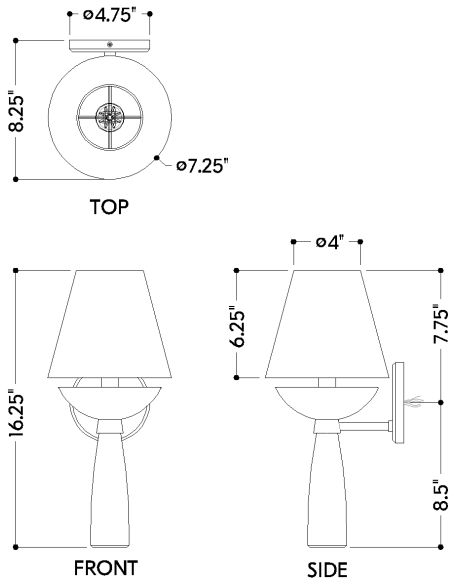

HUDSON VALLEY
LIGHTING GROUP

Battery
Battery Powered: Yes
Battery Included: Yes
Battery Life: ! New Battery Life !

SHIPPING

Carton 1: 15" x 15" x 12"
Carton 1 Weight: 6lb
Shipping Method: Ground
Country of Origin: IN