BAYCHESTER

7432-BRL

HUDSON VALLEY LIGHTING

Inspired by the tranquility of the sea, this handwoven pendant light provides ambient illumination day and night. Combining rustic materials, a conical rattan shade is suspended from a large Bronze Leaf loop and chain. Serving as a powerful downlight, it brims with contemporary character and functionality. Baychester is available in two sizes to suit your space.

*Due to the one-of-a-kind nature of the medium, exact colors and patterns may vary slightly from the image shown.

FINISHES

BRONZE LEAF



DIMENSIONS / SPECS

Height: 66"
Width/Diameter: 66"
Length: 66"
Minimum Height: 66"
Maximum Height: 66"
Canopy/Backplate: 6"
Hanging Type: 108" Premium Composite Cord
Product Weight: 66lb
Extension: 66"
Top to Center: 66"
Canopy/Backplate Shape: Round
Sloped Ceiling Compatible: No
Living Finish: Yes
Uplight Only: Yes
Min Extension: 66"
Max Extension: 66"

Shade 1: Rattan
Shade 1 Bottom L/W: 0" / 32"
Shade 1 Height: 9.75"

ELECTRICAL

Bulb 1
Bulb Included: No
Socket: E26 Medium Base
Bulb Type: G40
Max Wattage: 25
Bulb Quantity: 1
Wire Length: 500mm
Cord Type: ! New Cord Type
Dimmer Type: Incandescent
Switch Type: ON/OFF STOMP SWITCH
Gem Box Required (2"x3"): Yes
Dark Sky: Yes
Convertible: No
CRI: 66
Color Temp.: 66k
Lumens: 66
Title 24: Yes
Field Serviceable: No
Voltage: 120 VAC

Voltage: 120 VAC

Battery
Battery Powered: Yes
Battery Included: Yes
Battery Life: ! New Battery Life !

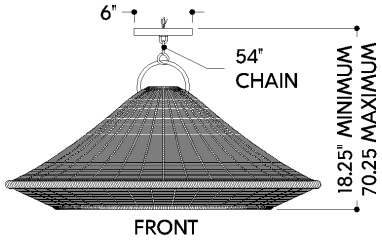

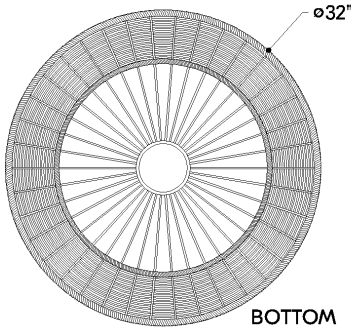

BAYCHESTER

7432-BRL

HUDSON VALLEY LIGHTING

SHIPPING

Carton 1: 36" x 36" x 19"
Carton 1 Weight: 31lb
Shipping Method: Truck Only
Country of Origin: PH