CLEMENTON

7317-AGB

HUDSON VALLEY LIGHTING

Inspired by nature, the retro silhouette of Clementon features a single orb accented by graceful details. The exterior shade is molded fron clear glass, while the opal shiny glass interior features elegant fluting. Finished in Aged Brass, Clementon can make a fresh statement alone or be grouped above a countertop.

FINISHES

AGED BRASS

DIMENSIONS / SPECS

Height: 66"
Width/Diameter: 66"
Length: 66"
Minimum Height: 66"
Maximum Height: 66"
Canopy/Backplate: 6"
Hanging Type: 108" Premium Composite Cord
Product Weight: 66lb
Extension: 66"
Top to Center: 66"
Canopy/Backplate Shape: Round
Sloped Ceiling Compatible: No
Living Finish: Yes
Uplight Only: Yes
Min Extension: 66"
Max Extension: 66"

Shade 1: Glass
Shade 1 Finish: Clear
Shade 1 Top Width: 13.5"
Shade 1 Height: 17"
Shade 2: Glass
Shade 2 Finish: Opal Shiny Ribbed
Shade 2 Top Width: 12.25"
Shade 2 Height: 11"

ELECTRICAL

Bulb 1
Bulb Included: No
Socket: E26 Medium Base
Bulb Type: A21
Max Wattage: 25
Bulb Quantity: 1
Wire Length: 500mm
Cord Type: ! New Cord Type
Dimmer Type: Incandescent
Switch Type: ON/OFF STOMP SWITCH
Gem Box Required (2"x3"): Yes
Dark Sky: Yes
Convertible: No
CRI: 66
Color Temp.: 66k
Lumens: 66
Title 24: Yes
Field Serviceable: No
Voltage: 120

Voltage: 120



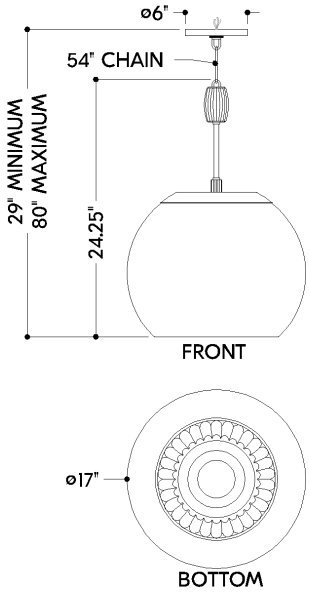

CLEMENTON

7317-AGB

HUDSON VALLEY LIGHTING

Battery

Battery Powered: Yes
Battery Included: Yes
Battery Life: ! New Battery Life !

SHIPPING

Carton 1: 21" x 21" x 20"
Carton 1 Weight: 21lb
Shipping Method: Ground
Country of Origin: VN