DEPTFORD

7218-AGB

HUDSON VALLEY LIGHTING

Aiming for a modernist style with LED lamping, Deptford's streamlined geometry and high functionality make it perfect for task lighting. The slim silhouette is accented by knurling details along the length of the shade, adding texture and visual interest. Available as a table lamp, floor lamp, and picture light in two sizes, Deptford is designed to layer and adapt to your space.

FINISHES

AGED BRASS

DIMENSIONS / SPECS

Height: 3"
Width/Diameter: 18"
Canopy/Backplate: 5"
Hanging Type: 1-3" / 1-6" / 1-12" / 2-18" Stems
Product Weight: 1.65lb
Extension: 7.5"
Top to Center: 1.5"
Canopy/Backplate Shape: Rectangle
Sloped Ceiling Compatible: No
Living Finish: No
Uplight Only: No

Shade 1: Acrylic
Shade 1 Finish: White
Shade 1 Top Length: 8"
Shade 1 Top Width: 0.75"



ELECTRICAL

Bulb 1
Bulb Included: N/A
Socket: Integrated LED
Max Wattage: 12
Bulb Quantity: 2
Cord Type: B & W TEFLON W/ GROUND WIRE
Dimmer Type: ELV, TRIAC
Gem Box Required (2"x3"): Yes
Dark Sky: No
Convertible: No
CRI: 90
Color Temp.: 2700k
Lumens: 700
Title 24: No
Field Serviceable: No
Voltage: 120-277V

Voltage: 120-277V

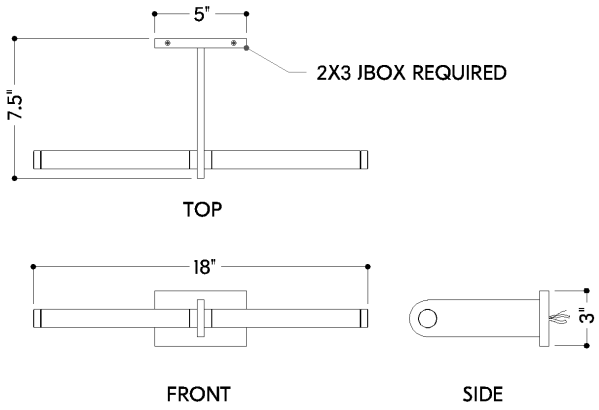

SHIPPING

Carton 1: 24" x 13" x 8"
Carton 1 Weight: 2lb
Shipping Method: Ground
Country of Origin: VN