IRONDALE

7132-AGB

HUDSON VALLEY LIGHTING

Exquisite materiality and mid-century inspired detailing elevate the minimalist hourglass configuration of Irondale. The vertical knurling on the stem seamlessly transitions into the hand-cut clear glass, creating a dynamic marriage of form and texture. Acting as both an uplight and downlight, Irondale's modern, refined presence is matched by its peak functionality.

FINISHES

AGED BRASS



DIMENSIONS / SPECS

Height: 66"
Width/Diameter: 66"
Length: 66"
Minimum Height: 66"
Maximum Height: 66"
Canopy/Backplate: 4.25"
Hanging Type: 108" Premium Composite Cord
Product Weight: 66lb
Extension: 66"
Top to Center: 66"
Canopy/Backplate Shape: Rectangle
Sloped Ceiling Compatible: No
Living Finish: Yes
Uplight Only: Yes
Min Extension: 66"
Max Extension: 66"

Shade 1: Glass
Shade 1 Finish: Clear Etched
Shade 1 Top Width: 4"
Shade 1 Height: 8.75"

ELECTRICAL

Bulb 1
Bulb Included: No
Socket: E26 Medium Base
Bulb Type: T10-5.5
Max Wattage: 15
Bulb Quantity: 2
Wire Length: 500mm
Cord Type: ! New Cord Type
Dimmer Type: Incandescent
Switch Type: ON/OFF STOMP SWITCH
Gem Box Required (2"x3"): Yes
Dark Sky: Yes
Convertible: No
CRI: 66
Color Temp.: 66k
Lumens: 66
Title 24: Yes
Field Serviceable: No
Voltage: 120

Voltage: 120
Gem Box: Required

Battery
Battery Powered: Yes
Battery Included: Yes
Battery Life: ! New Battery Life !

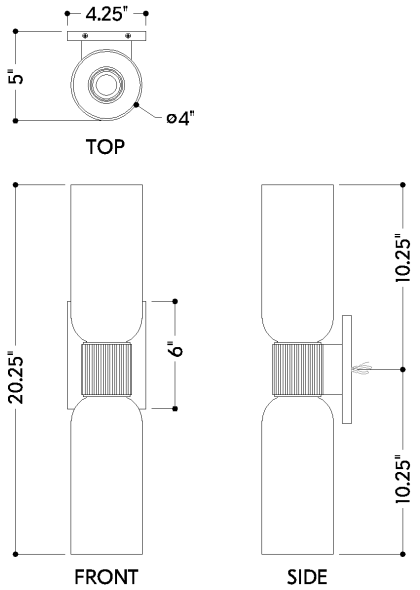

IRONDALE

7132-AGB

HUDSON VALLEY LIGHTING

SHIPPING

Carton 1: 16" x 13" x 9"
Carton 1 Weight: 10lb
Shipping Method: Ground
Country of Origin: IN