AMINA

6919-AGB

HUDSON VALLEY LIGHTING

Vintage meets modern in the Amina family. Traditional Victorian metalwork details, including wide bobeches, are paired with contemporary candle sleeves and short white linen shades. Finished in Aged Brass, the slender, elongated J-arms feature a dramatic swoop. Whether as a sconce or 5 or 9-light chandelier, Amina provides a fresh update to traditional forms.

FINISHES

AGED BRASS



DIMENSIONS / SPECS

Height: 66"
Width/Diameter: 66"
Length: 66"
Minimum Height: 66"
Maximum Height: 66"
Canopy/Backplate: 4.75"
Hanging Type: 108" Premium Composite Cord
Product Weight: 66lb
Extension: 66"
Top to Center: 66"
Canopy/Backplate Shape: Round
Sloped Ceiling Compatible: No
Living Finish: Yes
Uplight Only: Yes
Min Extension: 66"
Max Extension: 66"

Shade 1: Fabric
Shade 1 Finish: Textured Linen
Shade 1 Top Width: 4"
Shade 1 Bottom L/W: 0" / 6.25"
Shade 1 Height: 6"

ELECTRICAL

Bulb 1
Bulb Included: No
Socket: E12 Candelabra Base
Bulb Type: B11
Max Wattage: 10
Bulb Quantity: 1
Wire Length: 500mm
Cord Type: ! New Cord Type
Dimmer Type: Incandescent
Switch Type: ON/OFF STOMP SWITCH
Gem Box Required (2"x3"): Yes
Dark Sky: Yes
Convertible: No
CRI: 66
Color Temp.: 66k
Lumens: 66
Title 24: Yes
Field Serviceable: No
Voltage: 120

Voltage: 120
Gem Box: Required

Battery
Battery Powered: Yes
Battery Included: Yes
Battery Life: ! New Battery Life !

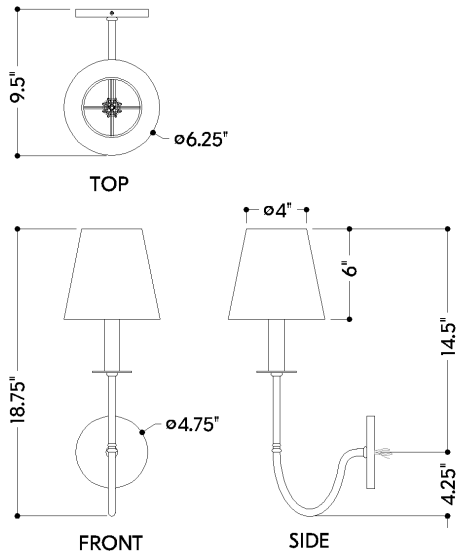

AMINA

6919-AGB

HUDSON VALLEY LIGHTING

SHIPPING

Carton 1: 17" x 12" x 9"
Carton 1 Weight: 4lb
Shipping Method: Ground
Country of Origin: VN