BROCKVILLE

6910-AGB

HUDSON VALLEY LIGHTING

Blending mid-century style with modern-day functionality, Brockville features a long, adjustable arm accompanied by an Aged Brass frame and shade. Ideal as task lighting in a home office or library, it is lit by bright, energy-efficient LED. Adding to its usability, the back plate hosts a full range dimmer for easy and flexible control of lighting.

FINISHES

AGED BRASS

DIMENSIONS / SPECS

Height: 66"
Width/Diameter: 66"
Length: 66"
Minimum Height: 66"
Maximum Height: 66"
Canopy/Backplate: 4.75"
Hanging Type: 108" Premium Composite Cord
Product Weight: 66lb
Extension: 66"
Top to Center: 66"
Canopy/Backplate Shape: Round
Sloped Ceiling Compatible: No
Living Finish: Yes
Uplight Only: Yes
Min Extension: 66"
Max Extension: 66"

Shade 1: Glass
Shade 1 Finish: White
Shade 1 Top Width: 4"
Shade 1 Height: 2"



ELECTRICAL

Bulb 1
Bulb Included: N/A
Socket: Integrated LED
Max Wattage: 9
Bulb Quantity: 1
Wire Length: 500mm
Cord Type: ! New Cord Type
Dimmer Type: Incandescent
Switch Type: ON/OFF STOMP SWITCH
Gem Box Required (2"x3"): Yes
Dark Sky: Yes
Convertible: No
CRI: 66
Color Temp.: 66k
Lumens: 66
Title 24: Yes
Field Serviceable: No
Voltage: 120V

Voltage: 120V
Gem Box: Required

Battery
Battery Powered: Yes
Battery Included: Yes
Battery Life: ! New Battery Life !

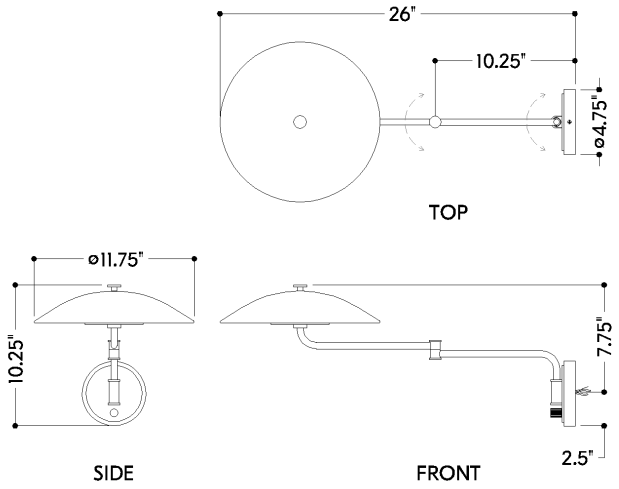

BROCKVILLE

6910-AGB

HUDSON VALLEY LIGHTING

SHIPPING

Carton 1: 28" x 15" x 7"
Carton 1 Weight: 6lb
Shipping Method: Ground
Country of Origin: VN