WESTTOWN

6822-AGB

HUDSON VALLEY LIGHTING

Elevating a minimalist silhouette, the Westtown sconce uses exquisite materiality to create a subtle statement. Secured with small Aged Brass thumbscrews, long pieces of piastre glass are positioned before an LED light source. Internally etched with a white swirl pattern, the glass creates a soft light diffusion, perfect for a hallway or bathroom.

FINISHES

AGED BRASS

DIMENSIONS / SPECS

Height: 66"
Width/Diameter: 66"
Length: 66"
Minimum Height: 66"
Maximum Height: 66"
Canopy/Backplate: 4.25"
Hanging Type: 108" Premium Composite Cord
Product Weight: 66lb
Extension: 66"
Top to Center: 66"
Canopy/Backplate Shape: Rectangle
Sloped Ceiling Compatible: No
Living Finish: Yes
Uplight Only: Yes
Min Extension: 66"
Max Extension: 66"

Shade 1: Cast Glass
Shade 1 Finish: Piastra
Shade 1 Top Width: 2.25"
Shade 1 Height: 22"



ELECTRICAL

Bulb 1
Bulb Included: N/A
Socket: Integrated LED
Max Wattage: 20
Bulb Quantity: 1
Wire Length: 500mm
Cord Type: ! New Cord Type
Dimmer Type: Incandescent
Switch Type: ON/OFF STOMP SWITCH
Gem Box Required (2"x3"): Yes
Dark Sky: Yes
Convertible: No
CRI: 66
Color Temp.: 66k
Lumens: 66
Title 24: Yes
Field Serviceable: No
Voltage: 120

Voltage: 120
Gem Box: Required

Battery
Battery Powered: Yes
Battery Included: Yes
Battery Life: ! New Battery Life !

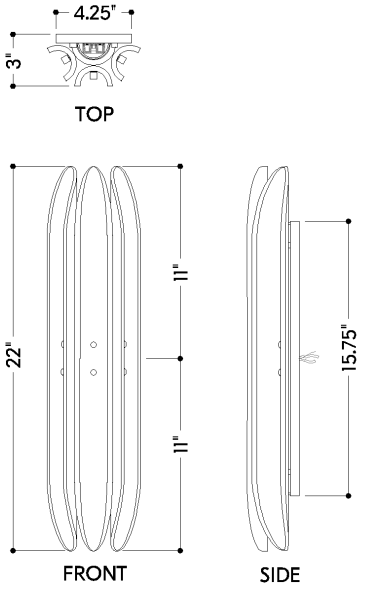

WESTTOWN

6822-AGB

HUDSON VALLEY LIGHTING

SHIPPING

Carton 1: 25" x 9" x 9"
Carton 1 Weight: 9lb
Shipping Method: Ground
Country of Origin: VN