CHESTER PARK

6718-AGB

HUDSON VALLEY LIGHTING

Inspired by a tulip in bloom, the two-tone glass silhouette of Chester Park is undeniably romantic. The faceted shade features a white interior, while the armback 'stem' is crafted from tinted champagne glass. This layering of glass creates distinctive lighting effects whether this one-light sconce is switched on or off. To finish the look, clean-lined metalwork adds a moment of modern detailing.

FINISHES

AGED BRASS



DIMENSIONS / SPECS

Height: 66"
Width/Diameter: 66"
Length: 66"
Minimum Height: 66"
Maximum Height: 66"
Canopy/Backplate: 3"
Hanging Type: 108" Premium Composite Cord
Product Weight: 66lb
Extension: 66"
Top to Center: 66"
Canopy/Backplate Shape: Rectangle
Sloped Ceiling Compatible: No
Living Finish: Yes
Uplight Only: Yes
Min Extension: 66"
Max Extension: 66"

Shade 1: Glass
Shade 1 Finish: Champagne
Shade 1 Top Width: 3.25"
Shade 1 Height: 5.75"

ELECTRICAL

Bulb 1
Bulb Included: No
Socket: E12 Candelabra Base
Bulb Type: B11
Max Wattage: 10
Bulb Quantity: 1
Wire Length: 500mm
Cord Type: ! New Cord Type
Dimmer Type: Incandescent
Switch Type: ON/OFF STOMP SWITCH
Gem Box Required (2"x3"): Yes
Dark Sky: Yes
Convertible: No

CRI: 66
Color Temp.: 66k
Lumens: 66
Title 24: Yes
Field Serviceable: No
Voltage: 120

Voltage: 120
Gem Box: Required

Battery
Battery Powered: Yes
Battery Included: Yes
Battery Life: ! New Battery Life !

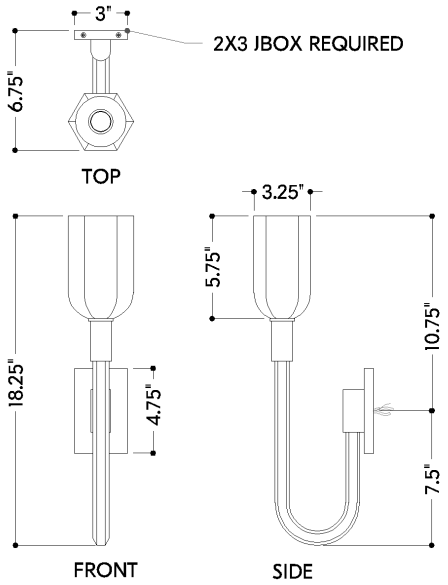

CHESTER PARK

6718-AGB

HUDSON VALLEY LIGHTING

SHIPPING

Carton 1: 21" x 10" x 7"
Carton 1 Weight: 2lb
Shipping Method: Ground
Country of Origin: VN