WATKINS

6623-AGB

HUDSON VALLEY LIGHTING

Inspired by vintage wicker chairs, Watkins celebrates the natural beauty of rattan. As light washes from the shade onto the stem, it highlights the intricate braided detail and earthy hue of the material. The subtle grain on the petite linen shade adds to the organic appea of this sconce. Finishing on a luxurious note, the backplate and stem cap are finished in Aged Brass.

*Due to the one-of-a-kind nature of the medium, exact colors and patterns may vary slightly from the image shown.

FINISHES

AGED BRASS

DIMENSIONS / SPECS

Height: 66"
Width/Diameter: 66"
Length: 66"
Minimum Height: 66"
Maximum Height: 66"
Canopy/Backplate: 4.75"
Hanging Type: 108" Premium Composite Cord
Product Weight: 66lb
Extension: 66"
Top to Center: 66"
Canopy/Backplate Shape: Round
Sloped Ceiling Compatible: No
Living Finish: Yes
Uplight Only: Yes
Min Extension: 66"
Max Extension: 66"

Shade 1: Linen
Shade 1 Finish: White
Shade 1 Top Width: 2"
Shade 1 Bottom L/W: 0" / 7"
Shade 1 Height: 7"

ELECTRICAL

Bulb 1
Bulb Included: No
Socket: E12 Candelabra Base
Bulb Type: B11
Max Wattage: 8
Bulb Quantity: 1
Wire Length: 500mm
Cord Type: ! New Cord Type
Dimmer Type: Incandescent
Switch Type: ON/OFF STOMP SWITCH
Gem Box Required (2"x3"): Yes
Dark Sky: Yes
Convertible: No
CRI: 66
Color Temp.: 66k
Lumens: 66
Title 24: Yes
Field Serviceable: No
Voltage: 120

Voltage: 120
Gem Box: Required



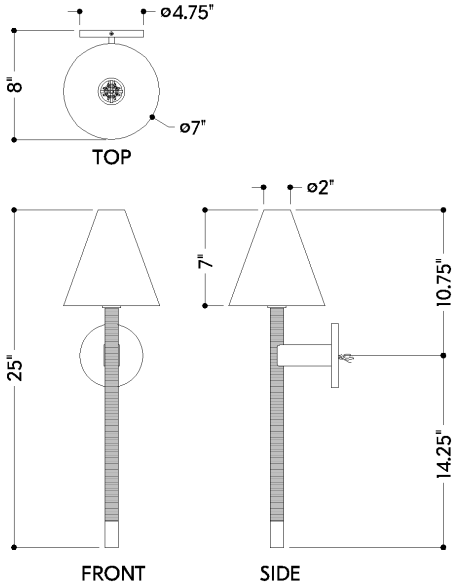

WATKINS

6623-AGB

HUDSON VALLEY LIGHTING

Battery

Battery Powered: Yes
Battery Included: Yes
Battery Life: ! New Battery Life !

SHIPPING

Carton 1: 24" x 12" x 12"
Carton 1 Weight: 9lb
Shipping Method: Ground
Country of Origin: VN