NORTHFORD

6216-DB

HUDSON VALLEY LIGHTING

Inspired by mid-century design aesthetics, Northford features a playful triangular arm and bell-shaped shade. The narrow backplate includes a dimmer switch that allows for precise adjustments in brightness. This fixture is perfect as a reading light above a sofa or lounge chair, or anywhere adjustable task lighting is required.

FINISHES

DISTRESSED BRONZE

DIMENSIONS / SPECS

Height: 66"
Width/Diameter: 66"
Length: 66"
Minimum Height: 66"
Maximum Height: 66"
Canopy/Backplate: 2.5"
Hanging Type: 108" Premium Composite Cord
Product Weight: 66lb
Extension: 66"
Top to Center: 66"
Canopy/Backplate Shape: Rectangle
Sloped Ceiling Compatible: No
Living Finish: Yes
Uplight Only: Yes
Min Extension: 66"
Max Extension: 66"

Shade 1: Steel
Shade 1 Finish: Distressed Bronze
Shade 1 Top Width: 1.5"
Shade 1 Bottom L/W: 0" / 5"
Shade 1 Height: 10.25"

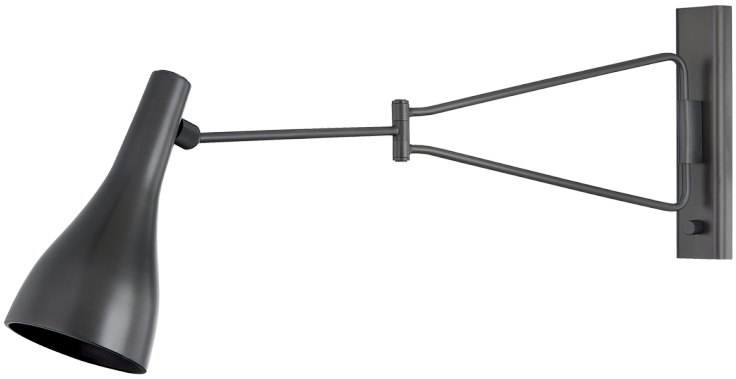

ELECTRICAL

Bulb 1
Bulb Included: No
Socket: E26 Medium Base
Bulb Type: R30 LED
Max Wattage: 25
Bulb Quantity: 1
Wire Length: 500mm
Cord Type: ! New Cord Type
Dimmer Type: Incandescent
Switch Type: ON/OFF STOMP SWITCH
Gem Box Required (2"x3"): Yes
Dark Sky: Yes
Convertible: No
CRI: 66
Color Temp.: 66k
Lumens: 66
Title 24: Yes
Field Serviceable: No
Voltage: 120

Voltage: 120
Gem Box: Required

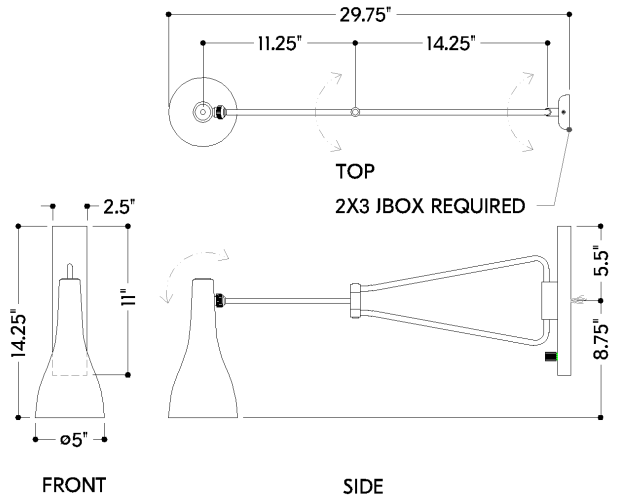

Battery
Battery Powered: Yes
Battery Included: Yes
Battery Life: ! New Battery Life !

NORTHFORD

6216-DB

HUDSON VALLEY LIGHTING

SHIPPING

Carton 1: 34" x 18" x 16"
Carton 1 Weight: 9lb
Shipping Method: Ground
Country of Origin: VN