YORKHILL

5822-VGL

HUDSON VALLEY LIGHTING

Finely handwoven from bleached abaca rope, Yorkhill channels bohemian style with its macramé-like design. This pendant lantern feature a two-tier structure with classic drum shades that softly filter the light. Suspended from a Vintage Gold Leaf rod and chain, Yorkhill infuses any space with coastal, airy beauty.

*Due to the one-of-a-kind nature of the medium, exact colors and patterns may vary slightly from the image shown.



FINISHES

VINTAGE GOLD LEAF

DIMENSIONS / SPECS

Height: 66"
Width/Diameter: 66"
Length: 66"
Minimum Height: 66"
Maximum Height: 66"
Canopy/Backplate: 4.75"
Hanging Type: 108" Premium Composite Cord
Product Weight: 66lb
Extension: 66"
Top to Center: 66"
Canopy/Backplate Shape: Round
Sloped Ceiling Compatible: No
Living Finish: Yes
Uplight Only: Yes
Min Extension: 66"
Max Extension: 66"

Shade 1: Abaca
Shade 1 Finish: Bleached
Shade 1 Top Width: 15"
Shade 1 Bottom L/W: 0" / 15"
Shade 1 Height: 13.25"
Shade 2: Abaca
Shade 2 Finish: Bleached
Shade 2 Top Width: 22"
Shade 2 Bottom L/W: 0" / 22"
Shade 2 Height: 8.25"

ELECTRICAL

Bulb 1
Bulb Included: No
Socket: E12 Candelabra Base
Bulb Type: B11
Max Wattage: 8
Bulb Quantity: 3
Wire Length: 500mm
Cord Type: ! New Cord Type
Dimmer Type: Incandescent
Switch Type: ON/OFF STOMP SWITCH
Gem Box Required (2"x3"): Yes
Dark Sky: Yes
Convertible: No
CRI: 66
Color Temp.: 66k
Lumens: 66
Title 24: Yes
Field Serviceable: No
Voltage: 120

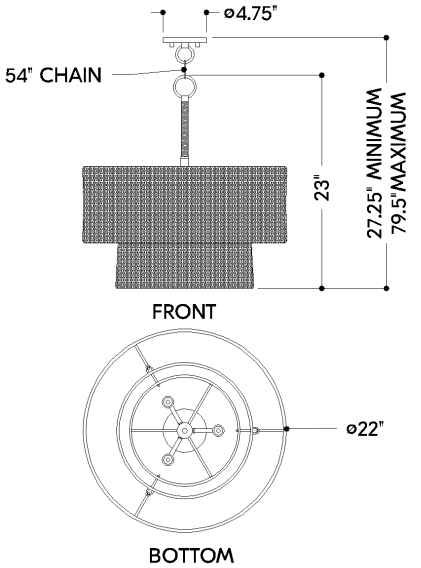

YORKHILL

5822-VGL

HUDSON VALLEY LIGHTING

Voltage: 120

Battery
Battery Powered: Yes
Battery Included: Yes
Battery Life: ! New Battery Life !

SHIPPING

Carton 1: 26" x 26" x 21"
Carton 1 Weight: 25lb
Shipping Method: Ground
Country of Origin: PH