GROVELAND STATION

5518-AGB

HUDSON VALLEY LIGHTING

The rounded edges of Groveland Station soften the angularity of minimalist spaces. Supported by an innovative curved backplate and bracket system, this matte cloud glass tube sconce provides peak versatility with two size options. Made from a single piece of metal, the backplate frames the shade to reflect light in all directions.

FINISHES

AGED BRASS

DIMENSIONS / SPECS

Height: 66"
Width/Diameter: 66"
Length: 66"
Minimum Height: 66"
Maximum Height: 66"
Canopy/Backplate: 4.25"
Hanging Type: 108" Premium Composite Cord
Product Weight: 66lb
Extension: 66"
Top to Center: 66"
Canopy/Backplate Shape: Rectangle
Sloped Ceiling Compatible: No
Living Finish: Yes
Uplight Only: Yes
Min Extension: 66"
Max Extension: 66"

Shade 1: Glass
Shade 1 Finish: Matte Cloud
Shade 1 Top Width: 2.25"
Shade 1 Height: 13.25"
Shade 2: Glass
Shade 2 Finish: Matte Cloud
Shade 2 Top Width: 2.25"
Shade 2 Height: 4.25"

ELECTRICAL

Bulb 1
Bulb Included: N/A
Socket: Integrated LED
Max Wattage: 8
Bulb Quantity: 1
Wire Length: 500mm
Cord Type: ! New Cord Type
Dimmer Type: Incandescent
Switch Type: ON/OFF STOMP SWITCH
Gem Box Required (2"x3"): Yes
Dark Sky: Yes
Convertible: No
CRI: 66
Color Temp.: 66k
Lumens: 66
Title 24: Yes
Field Serviceable: No
Voltage: 120

Voltage: 120
Gem Box: Required



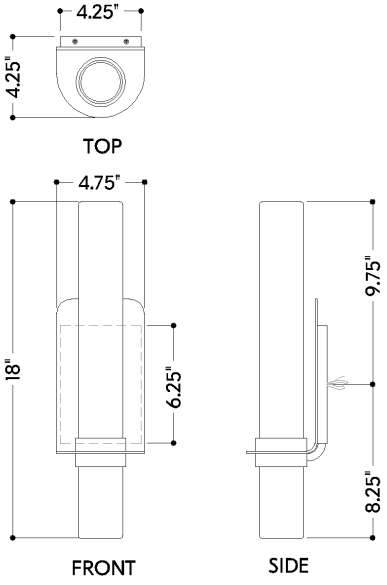

GROVELAND STATION

5518-AGB

HUDSON VALLEY LIGHTING

Battery

Battery Powered: Yes
Battery Included: Yes
Battery Life: ! New Battery Life !

SHIPPING

Carton 1: 22" x 13" x 8"
Carton 1 Weight: 7lb
Shipping Method: Ground
Country of Origin: VN