AMALTHEA

481-03-VB

CORBETT

Defined by a poetic, gestural array of sweeping arms, the family of Amalthea is alluring and modern. Perched at the tip of each arm is a thin etched acrylic rod, end-lit with LED. While reminiscent of slender torches, the Vintage Brass branches also come across as organic. Each variation in this family, including a 3-light sconce and 18 or 30-light chandelier offers distinctive visual appeal while providing a lighting solution to meet the needs of your space.

FINISHES

VINTAGE BRASS

DIMENSIONS / SPECS

Height: 26"
Width/Diameter: 4.75"
Canopy/Backplate: 3"
Product Weight: 3.3lb
Extension: 2.25"
Top to Center: 18.5"
Canopy/Backplate Shape: Rectangle
Sloped Ceiling Compatible: No
Living Finish: Yes
Uplight Only: Yes

Shade 1: Acrylic
Shade 1 Finish: Etched Matte
Shade 1 Top Width: 0.75"
Shade 1 Height: 5.5"

ELECTRICAL

Bulb 1
Bulb Included: N/A
Socket: Integrated LED
Bulb Type: LED
Max Wattage: 6
Bulb Quantity: 3
Cord Type: B & W TEFLON W/ GROUND WIRE
Dimmer Type: ELV, TRIAC
Gem Box Required (2"x3"): Yes
Dark Sky: No
Convertible: No

CRI: 90
Color Temp.: 2700k
Lumens: 275
Title 24: No
Field Serviceable: No
Voltage: 120

Voltage: 120
Gem Box: Required

SHIPPING

Carton 1: 34" x 11" x 6"
Carton 1 Weight: 6lb
Shipping Method: Ground
Country of Origin: VN



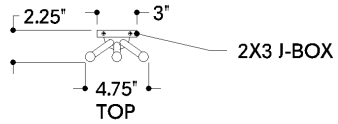

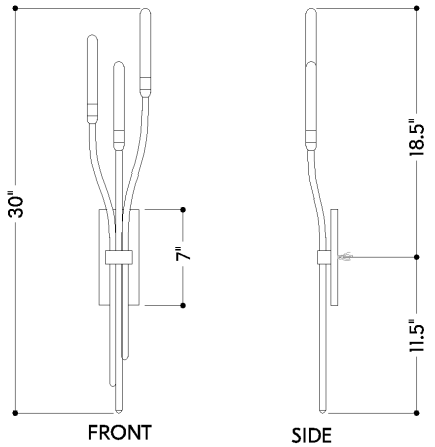

HUDSON VALLEY
LIGHTING GROUP