SORRENTO

474-17-VB/VPT

CORBETT

A celebration of the beauty of natural alabaster, this minimalist tube sconce is a timeless staple for the modern home. An elongated backplate frames the alabaster shade with a slim touch of metal. The Vintage and Patina Brass finishes forge a geometric relationship with the softness of the natural veining of the stone. Available in two sizes, Sorrento has bath and powder room crossover appeal.

*Due to the one-of-a-kind nature of the medium, exact colors and patterns may vary slightly from the image shown.

FINISHES

VINTAGE BRASS w/ VINTAGE PEWTER

DIMENSIONS / SPECS

Height: 17"
Width/Diameter: 3"
Canopy/Backplate: 3"
Product Weight: 8.5lb
Extension: 3.75"
Top to Center: 8.5"
Canopy/Backplate Shape: Rectangle
Sloped Ceiling Compatible: No
Living Finish: Yes
Uplight Only: No

Shade 1: Natural Stone
Shade 1 Finish: Alabaster
Shade 1 Top Width: 2.75"
Shade 1 Height: 14.25"

ELECTRICAL

Bulb 1
Bulb Included: N/A
Socket: Integrated LED
Bulb Type: LED
Max Wattage: 8
Bulb Quantity: 1
Cord Type: B & W TEFLON W/ GROUND WIRE
Dimmer Type: ELV, TRIAC
Gem Box Required (2"x3"): Yes
Dark Sky: No
Convertible: No
CRI: 90
Color Temp.: 2700k
Lumens: 375
Title 24: No
Field Serviceable: No
Voltage: 120

Voltage: 120
Gem Box: Required

SHIPPING

Carton 1: 26" x 7" x 6"
Carton 1 Weight: 10lb
Shipping Method: Ground
Country of Origin: VN



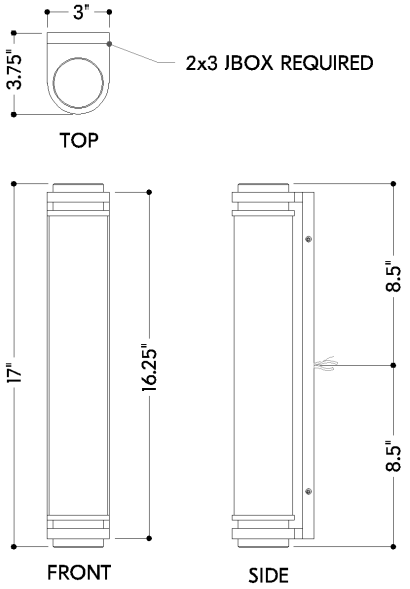

HUDSON VALLEY
LIGHTING GROUP